SCHMERSAL

EN Operating instructions. . . . . .pages 1 to 14
Original

Content

1 About this document
1.1 Function 1
1.2 Target group: authorised qualified personnel 1
1.3 Explanation of the symbols used 1
1.4 Appropriate use 1
1.5 General safety instructions 1
1.6 Warning about misuse 2
1.7 Exclusion of liability 2

2 Product description
2.1 Ordering code 2
2.2 Special versions 2
2.3 Comprehensive quality insurance to 2006/42/EC 2
2.4 Purpose 2
2.5 Technical data 3
2.6 Safety classification 3

3 Mounting
3.1 General mounting instructions 4
3.2 Manual release 5
3.3 Electrical manual release - E (for -ST2) 5
3.4 Emergency exit -T 5
3.5 Assembly with mounting set 5
3.6 Dimensions 6
3.7 Actuator and accessories 6

4 Electrical connection
4.1 General information for electrical connection 7
4.2 Control options in the normal operating mode 7
4.3 Requirements for the connected safety-monitoring module 7

5 Operating principles and coding
5.1 Mode of operation of the safety outputs 8
5.2 Actuator teaching / actuator detection 8

6 Diagnostic functions
6.1 Diagnostic-LEDs 8
6.2 Diagnostic information 9

7 Set-up and maintenance
7.1 Functional testing 10
7.2 Maintenance 10

8 Disassembly and disposal
8.1 Disassembly 10
8.2 Disposal 10

9 Appendix
9.1 Wiring examples 11
9.2 Wiring configuration and accessories 12

10 EU Declaration of conformity

1. About this document

1.1 Function

This operating instructions manual provides all the information you need for the mounting, set-up and commissioning to ensure the safe operation and disassembly of the safety switchgear. The operating instructions must be available in a legible condition and a complete version in the vicinity of the device.

1.2 Target group: authorised qualified personnel

All operations described in this operating instructions manual must be carried out by trained specialist personnel, authorised by the plant operator only.

Please make sure that you have read and understood these operating instructions and that you know all applicable legislations regarding occupational safety and accident prevention prior to installation and putting the component into operation.

The machine builder must carefully select the harmonised standards to be complied with as well as other technical specifications for the selection, mounting and integration of the components.

1.3 Explanation of the symbols used

Information, hint, note:
This symbol is used for identifying useful additional information.

Caution: Failure to comply with this warning notice could lead to failures or malfunctions.
Warning: Failure to comply with this warning notice could lead to physical injury and/or damage to the machine.

1.4 Appropriate use

The products described in these operating instructions are developed to execute safety-related functions as part of an entire plant or machine. It is the responsibility of the manufacturer of a machine or plant to ensure the correct functionality of the entire machine or plant.

The safety switchgear must be exclusively used in accordance with the versions listed below or for the applications authorised by the manufacturer. Detailed information regarding the range of applications can be found in the chapter "Product description".

1.5 General safety instructions

The user must observe the safety instructions in this operating instructions manual, the country specific installation standards as well as all prevailing safety regulations and accident prevention rules.

x.000 / 09.2020 / v.A. - 103016610-EN / C / 2020-09-21 / AE-Nr. 12693

Further technical information can be found in the Schmersal catalogues or in the online catalogue on the Internet: products.schmersal.com.

The information contained in this operating instructions manual is provided without liability and is subject to technical modifications. There are no residual risks, provided that the safety instructions as well as the instructions regarding mounting, commissioning, operation and maintenance are observed.

1.6 Warning about misuse

In case of improper use or manipulation of the safety switchgear, personal hazards or damages to machinery or plant components cannot be excluded. The relevant requirements of the standard EN ISO 14119 must be observed.

1.7 Exclusion of liability

We shall accept no liability for damages and malfunctions resulting from defective mounting or failure to comply with this operating instructions manual. The manufacturer shall accept no liability for damages resulting from the use of unauthorised spare parts or accessories.

For safety reasons, invasive work on the device as well as arbitrary repairs, conversions and modifications to the device are strictly forbidden, the manufacturer shall accept no liability for damages resulting from such invasive work, arbitrary repairs, conversions and/or modifications to the device.

2. Product description

2.1 Ordering code

This operating instructions manual applies to the following types:

AZM400Z-①-②-③-④-⑤

No.	Option	Description
①	ST	1 Connector plug M12, 8-pin
	ST2	2 Connector plug M12, 8-pin / 5-pin
②		Standard coding
	I1	Individual coding
	I2	Individual coding, re-teaching enabled
③	1P2P	1 diagnostic output and 2 safety outputs, all p-type (only in connection with ST)
	2P2P	2 diagnostic outputs and 2 safety outputs, all p-type (only in connection with ST2)
④		Manual release
	T	Emergency exit
	BOW	With securing holes for Bowden cable assembly
⑤		Without electrical manual release (only in connection with ST)
	E	With electronic manual release (only in connection with ST2)

Actuator AZM400-B1

Versions AZM400Z-...-BOW may only be used in connection with Bowden cable release ACC-AZM400-BOW-.M-.M, which is available as an accessory.
Use without the Bowden cable release fitted is not permissible.
Observe the additional information in the operating instructions of the Bowden cable release.

2.2 Special versions

For special versions, which are not listed in the order code below 2.1, these specifications apply accordingly, provided that they correspond to the standard version.

2.3 Comprehensive quality insurance to 2006/42/EC

Schmersal is a certified company to appendix X of the Machinery Directive. As a result, Schmersal is entitled to autonomously conduct the conformity assessment procedure for the products listed in Appendix IV of the MD without involving a notified body. The prototype test certificates are available upon request or can be downloaded from the Internet at products.schmersal.com.

2.4 Purpose

The non-contact, electronic solenoid interlock is designed for application in safety circuits and is used for monitoring the position and locking of movable safety guards.

The safety switchgears are classified according to EN ISO 14119 as type 4 interlocking devices. Designs with individual coding are classified as highly coded.

The first of the two safety functions is the safe shut-down of both safety outputs when unlocking or opening the guard system and making sure that the switched-off position is maintained when the guard system is open or unlocked (locking function).
The second safety function (interlocking function) is the safe interlocking of a guard system which was locked only once. The locking of the guard system may only be switched off when there is no fault and a valid signal to unlock is present.

When the guard system is closed and there is a valid two-channel control signal applied by the user or through the controller, the locking bolt of the AZM400 can be driven out. As soon as the locking bolt have reached sufficient depth in the locking hole the guard system is considered to be safely locked.

The AZM400 solenoid interlock is a bi-stable system, which means the interlock remains in the last position if power is lost.

The user must evaluate and design the safety chain in accordance with the relevant standards and the required safety level.
If multiple safety switchgears are involved in the same safety function, the PFH values of the individual components must be added.

The entire concept of the control system, in which the safety component is integrated, must be validated to the relevant standards.

2.5 Technical data

Standards:	EN 60947-5-3, EN ISO 14119, EN ISO 13849-1, IEC 61508
Material of the enclosure:	Aluminium die-cast
Active principle:	RFID / Magnetic field
Frequency band:	125 kHz
Transmitter output:	max. –6 dBm
Coding level according to EN ISO 14119:	
- I1-version:	high
- I2-version:	high
- Standard coding version:	low
Time to readiness:	≤ 1.5 s
Response time:	≤ 100 ms
Actuator:	AZM400-B1
Switch distances:	
Allowable distance actuator / device incl. angular misalignment:	1 … 7 mm
Minimum distance devices:	30 mm
Mechanical data:	
Holding force F_{max}:	13,000 N
Holding force F_{Zh}:	10,000 N
Max. lateral force with bolt return (against tensioned door):	300 N (does not apply to emergency release, manual release and Bowden cable release)
Mechanical life:	≥ 1 000 000 switching cycles
- Which have a lateral force F_{lat} = 100 N:	100 000 switching cycles
Design of the electrical connection:	
- ST:	1 connector M12, 8-pin, A-coded
- ST2:	2 connector M12, 8-pin / 5-pin, both A-coded
Fixing screws:	2 x M6 (10.9)
Tightening torque for the ELM fixing screws:	8 Nm
Ambient conditions:	
Ambient temperature:	−20 °C … +55 °C
Storage and transport temperature:	−40 °C … +85 °C
Relative humidity:	max. 93 %, non condensing, non icing
Protection class:	IP66, IP67 as per EN 60529
- AZM400Z-...-BOW:	Same protection classes with correctly installed Bowden cable release
Installation altitude above sea level:	max. 2,000 m
Protection class:	III
Resistance to shock:	30 g / 11 ms
Resistance to vibration:	10 … 150 Hz, Amplitude 0.35 mm
Insulation values to IEC 60664-1:	
- Rated insulation voltage U_i:	32 VDC
- Rated impulse withstand voltage U_{imp}:	0.8 kV
- Over-voltage category:	III
- Degree of pollution:	3
Electrical data:	
Operating voltage U_B:	24 VDC –15 % / +10 % (stabilised PELV - power supply)
Auxiliary power supply U_{he} (for -ST2 only):	24 VDC –15 % / +10 % (UPS / uninterruptible power supply)
Switching frequency:	≤ 0.3 Hz
Power consumption device:	0.1 A
Operating current when bolt being driven:	max. 0.6 A
Required rated short-circuit current:	100 A
External Device fuse rating:	2 A gG
Min. open / close cycle (Motor):	3 s
- with continuous operation: min. average cycle time:	20 s
Electrical data – Safety outputs:	
Safety outputs:	Y1 and Y2
Switching elements:	p-type, short-circuit proof
Utilisation category:	DC-12, DC-13
- Rated operating voltage U_e:	24 VDC
- Rated operating current I_e:	each max. 0.25 A
Leakage current I_r:	≤ 0.5 mA
Voltage drop Ud:	≤ 2 V
Test pulse duration:	≤ 0.5 ms
Test pulse interval:	1,000 ms
Classification:	ZVEI CB24I

Source:	C2		Sink:	C1	C2	

Electrical data – diagnostic outputs:	
- ST:	1 diagnostic output, OUT
- ST2:	2 diagnostic outputs, OUT1 and OUT2
Switching elements:	p-type, short-circuit proof
Utilisation category:	DC-12, DC-13
- Rated operating voltage U_e:	24 VDC
- Rated operating current I_e:	max. 0.05 A
Voltage drop U_d:	≤ 2 V
Electrical data – control inputs interlocking functions:	
Control inputs to unlock:	E1 and E2, p-type, E3, n-type
Switching thresholds:	− 3 V … 5 V (Low), 15 V … 30 V (High)
Operating current per input:	> 10 mA … < 15 mA / 24 V
Permissible residual drive current:	1.5 mA
Allowable discrepancy time input:	≤ 10 s
Accepted test pulse duration on input signal:	≤ 5.0 ms
- With test pulse interval of:	≥ 40 ms
Classification:	ZVEI CB24I

Sink:	C0		Source:	C1	C2	C3

For use in NFPA 79 Applications only.
Use Limited Voltage/Current power supply only.
Adapters providing field wiring means are available from the manufacturer. Refer to manufacturer's information.
This device shall be powered with the use of a Listed (CYJV) cable/ connector assembly rated 24 Vdc, 0.6 A minimum.

This device complies with part 15 of the FCC Rules and contains licence-exempt transmitter(s)/receiver(s) that comply with Innovation, Science and Economic Development Canada's licence-exempt RSS(s):
Operation is subject to the following two conditions:
(1) This device may not cause harmful interference, and
(2) this device must accept any interference received, including interference that may cause undesired operation.
This device complies with the Nerve Stimulation Exposure Limits (ISED SPR-002) for direct touch operations. Changes or modifications not expressly approved by K.A. Schmersal GmbH & Co. KG could void the user's authority to operate the equipment.

L'émetteur/récepteur exempt de licence contenu dans le présent appareil est conforme aux CNR d'Innovation, Sciences et Développement économique Canada applicables aux appareils radio exempts de licence. L'exploitation est autorisée aux deux conditions suivantes:
(1) L'appareil ne doit pas produire de brouillage.
(2) L'appareil doit accepter tout brouillage radioélectrique subi, même si le brouillage est susceptible d'en compromettre le fonctionnement.
Cet appareil est conforme aux limites d'exposition relatives à la stimulation des nerfs (ISED CNR-102) pour les opérations tactiles directes.
Changements ou modifications non expressément approuvés par K.A.Schmersal GmbH & Co. KG pourrait annuler le droit de l'utilisateur à utiliser l'équipement.

2.6 Safety classification

- of the interlocking function:

Standards:	EN ISO 13849-1, IEC 61508
PL:	up to e
Control category:	up to 4
PFH:	1.0×10^{-9} / h
PFD:	9.0×10^{-5}
SIL:	suitable for SIL 3 applications
Mission time:	20 years

- of the guard locking function:

Standards:	EN ISO 13849-1, IEC 61508
PL:	up to e
Control category:	up to 4
PFH:	1.8×10^{-9} / h
PFD:	1.6×10^{-4}
SIL:	suitable for SIL 3 applications
Mission time:	20 years

3. Mounting

3.1 General mounting instructions

Please observe the remarks of the standards EN ISO 12100, EN ISO 14119 and EN ISO 14120.

Any mounting position.

The accumulation of fine-grained contamination in the area of the bolt is to be prevented.
In such a case it is therefore not advised to have vertical mounting, where the bolt goes upwards from below.

For the correct fixing of the solenoid interlock, the device is provided with two mounting holes for M6 screws.

The M6 screws should have at least the strength class 10.9.
The tightening torque of the M6 screws is 8 Nm.

The actuator must be permanently fitted to the safety guards and protected against displacement by suitable measures (tamperproof screws, gluing, drilling of the screw heads).

Use in temperatures below freezing is permitted only with dry cold. The customer must take this into account when assembling the safety switch.

Actuating directions and switch distances
The AZM400 can be operated within the following tolerance limits:
X – axis: ± 4 mm
Y – axis: ± 4 mm
Z – axis: Distance between actuator and solenoid interlock 1 … 7 mm
with max. angle offset of 2°

The actuating curves show the typical detection range of the actuator depending on the actuating direction.

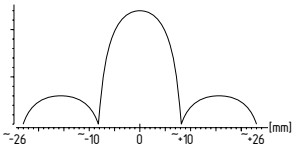

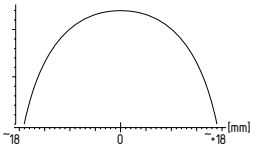

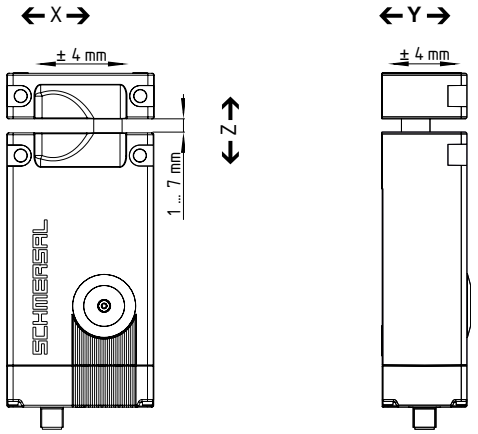

The approach direction must only be from the X and Y directions.

The maximum distance of 7 mm between the actuator and the solenoid interlock must be maintained so that the stipulated clamping force and the safe clamping function is achieved according to SIL 3.
The construction of the guard door is to be designed so that it is not possible to move the guard system with the actuator on the Z axis so far that the distance between the interlock and the actuator is greater than 7 mm.

The safety equipment must be designed so that there is no crushing hazard due to the movement of the bolt.

Mounting of the solenoid interlock and the actuator
Refer to the mounting instructions manual for the corresponding actuator.

To avoid any interference inherent to this kind of system and any reduction of the switching distances, please observe the following guidelines:
- Metal parts and magnetic fields in the area of the solenoid interlock and the actuator can influence the switch distance or lead to malfunctions.
- Keep away from metal chips.

Minimum distance between two solenoid interlocks
as well as other systems with same frequency (125 kHz): 30 mm.

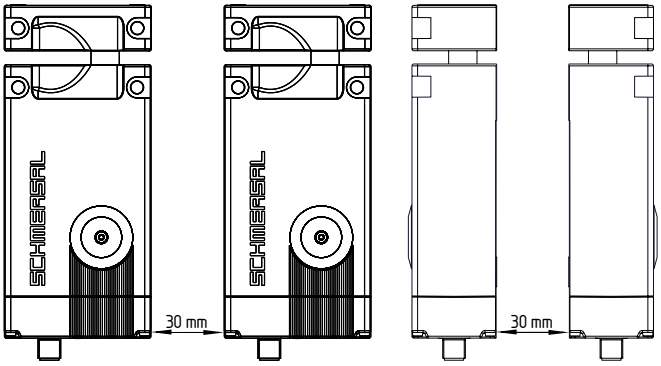

3.2 Manual release

For the machine set-up, the solenoid interlock can be unlocked in a de-energised condition. Turning the triangle of the manual release using the triangular key to the position releases the solenoid interlock. The normal locking function is only restored after the manual release has been returned to its original position.

Triangular key TK-M5 (101100887) available as accessory.

Structurally, after turning back the mechanical release a mechanical release that is still active can be indicated by the LEDs (all three LEDs flash). These will be reset after the control inputs are driven again.

Do not turn the manual release beyond the end stop.

After successful commissioning the attached cover is to be screwed onto the manual release and then secured with the appropriate seal. The maximum tightening torque of the cover screw is 0.55 Nm.

Locked position:

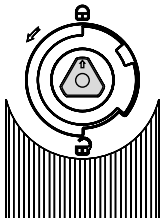

Unlocked position:

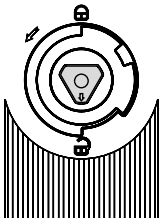

3.3 Electrical manual release - E (for -ST2)

The electrical manual release can be achieved with an additional auxiliary power supply. The auxiliary power supply unit H1 is for this purpose.
The AZM400 should only be supplied with the auxiliary power supply, this is so the locking bolt can be released independently of the control inputs.
Then no other actions are required, the safety and diagnostic units remain off.

System condition (only valid during the initialising phase):

Main supply	Auxiliary supply	System condition
0	0	Locking bolt remains in position (safety outputs switched off)
24 V	0	dependent on the control inputs
0	24 V	Locking bolt is retracted automatically (unlock)
24 V	24 V	Locking bolt remains in position (fault)

The wiring and actuation of the electrical manual release is to undergo a technical safety validation. The signal from the auxiliary power supply via UPS is then processed differently and internally so that short-circuits can be detected.

3.4 Emergency exit -T

Emergency exit for use within the hazardous area.

To activate the emergency exit, turn the red lever in the direction of the arrow to the end stop. The bolt moves due to spring force to the unlocked position so that the guard system can be opened in this position and the safety outputs switch off. In the unlocked position, the guard system is secured against unintentional locking.

Do not turn beyond the end stop.

Locked position:

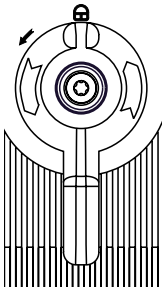

Unlocked position:

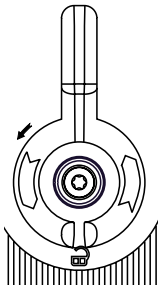

To ensure correct operation of emergency exit -T the safety door/guard must not be in a mechanically tensioned state.

3.5 Assembly with mounting set

When using 40 mm aluminium profile, the optimum mounting set MS-AZM400 can be used. This consists of two mounting plates including four bolt and four nuts.

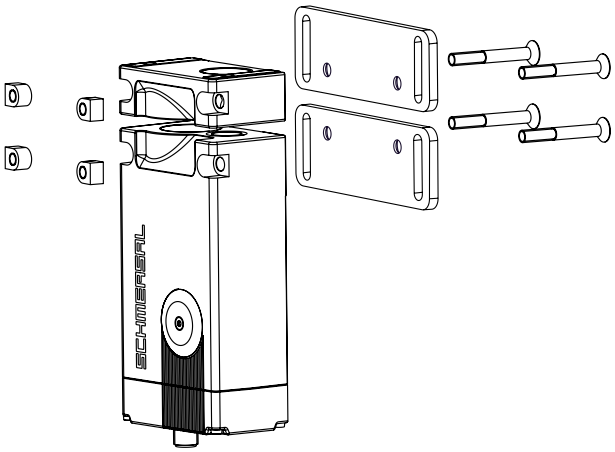

3.6 Dimensions

All measurements in mm.

AZM400Z-ST

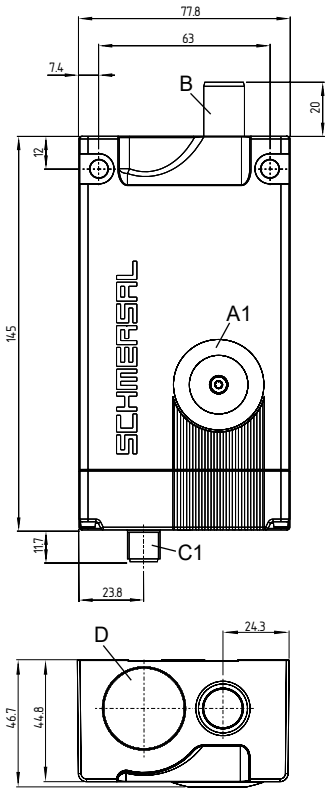

AZM400Z-ST2

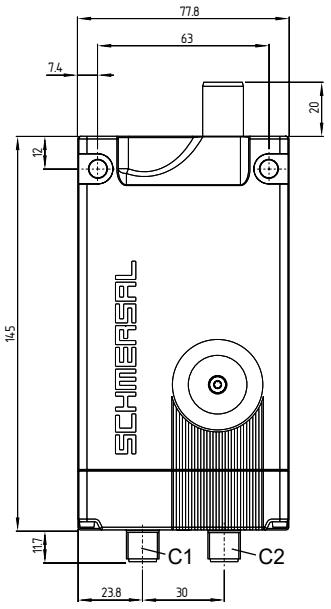

Device for emergency exit

AZM400Z-ST..-T

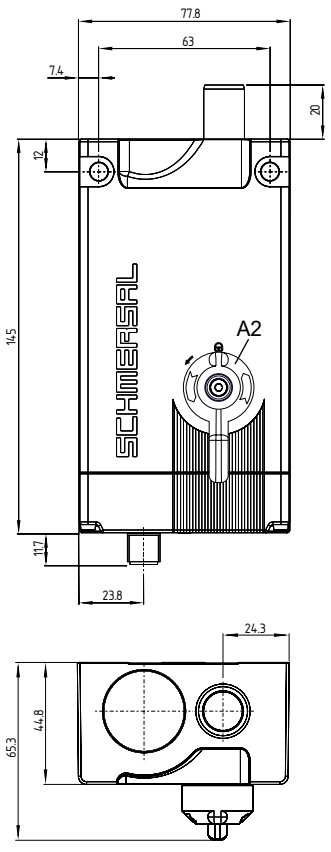

AZM400Z-ST2..-T

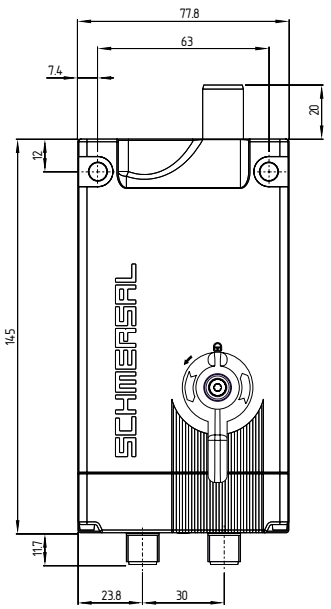

Key

A1:	Manual release with cover	C1:	Connector plug M12, 8-pole
A2:	Emergency exit	C2:	Connector plug M12, 5-pole
B:	Locking bolt (extended)	D:	RFID sensor

3.7 Actuator and accessories

Actuator AZM400-B1 (not included in delivery)

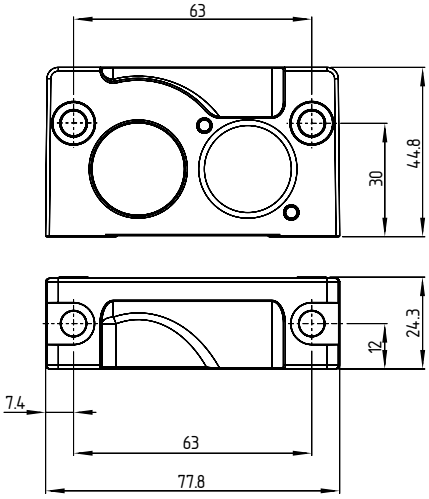

Mounting plate, part of the mounting set MS-AZM400 (available as accessory)

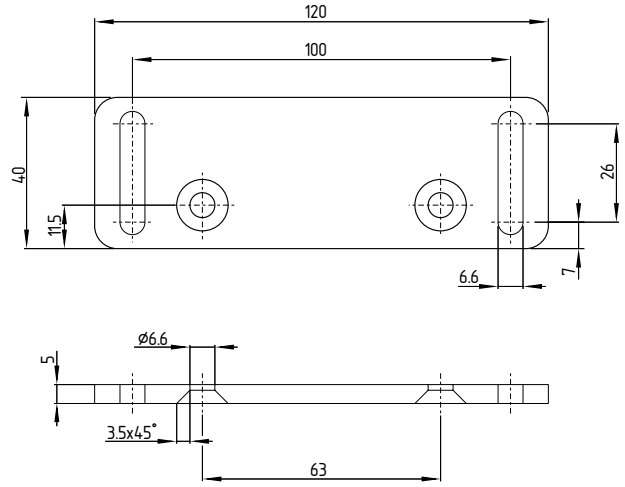

Lockout tag SZ400

(available as accessory)

For detailed information and assembly instructions, see operating instructions SZ400.

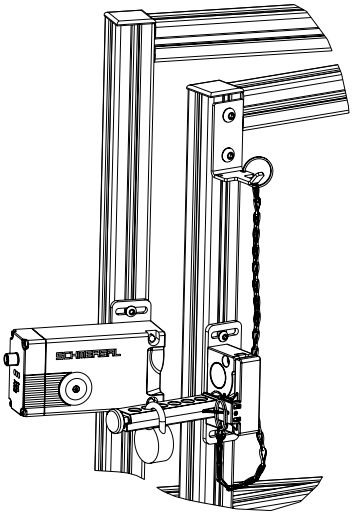

Bowden cable release ACC-AZM400-BOW-.M-.M

(available as accessory)

Observe the additional notes in the operating instructions of the Bowden cable release.

4. Electrical connection

4.1 General information for electrical connection

The electrical connection may only be carried out by authorised personnel in a de-energised condition.

The voltage inputs A1 (and H1 with the AZM400Z-ST2..), and the control inputs E1, E2 and E3 must have a permanent protection against over-voltage. The use of PELV supply units according to EN 60204-1 is recommended. The safety outputs can be integrated into the safety circuit of the control system.

The required electrical cable fuse protection must be integrated in the installation.

4.2 Control options in the normal operating mode

Due to the control inputs E1, E2 and E3 for controlling the guard locking function it is possible to use different control options to be able to drive the AZM400 with a different safety controller. The function of the control inputs is the same for both ST and ST2 versions.
Setting the operational control inputs according to the following table causes the interlock to unlock.

Input condition	Version P/P			Version P/N	
	E1	**E2**	**E3**	**E1 = E2**	**E3**
Lock	open	open	GND	open	open
Unlock	24 V	24 V	GND	24 V	GND

Use of safety outputs of the type P/P:
Safety controller

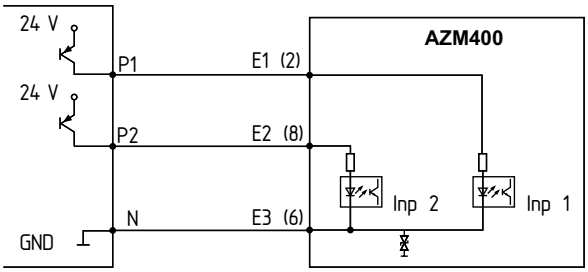

Use of safety controls of the type P/N:
Safety controller

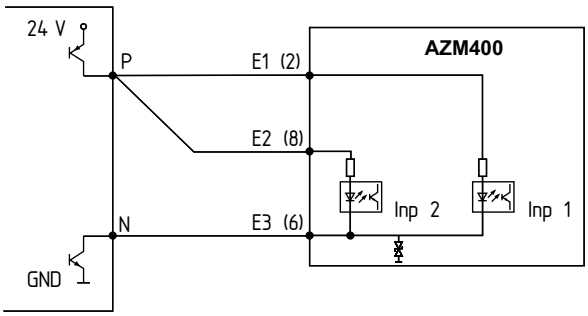

The outputs used for the control must correspond to the Performance Level (PL) of the guard system.
To achieve the PL e the control must have tested outputs as these are not tested by the AZM400.

Independent of the version used, the notes in the Operating Instructions of the used controller should be observed.
These could include:
- Shielded installed cable
- Minimum interval every 24 hours
- etc.

Block drive
If the locking bolt does not reach the "locked" condition with the first attempt, the AZM400 makes an autonomous attempt. If the second attempt also fails, the AZM400 signals a fault (comp. table 2).
After a malfunction, condition of the control inputs has to be changed to allow the locking bolt to be driven out again.

When the guard system closes slowly, a block drive can occur if the actuator that is opening is not in front of the bolt being driven out (see Chapter "Operating equipment and distances").

Unlocking after Power On
If after switching on, the AZM400 is already in the locked position, the device must first be unlocked and then locked again. This is to verify the causality of the drive signals and to check the sufficient depth of the locking bolt. The yellow LED flashes after power-on in the locked position.

4.3 Requirements for the connected safety-monitoring module

- Dual-channel safety input, suitable for 2 p-type semi-conductor outputs (OSSD)

The solenoid interlock cyclically switch off the safety output to test them. The safety-monitoring module therefore does not need to be equipped with a cross-wire short detection. The test impulse time of ≤ 0.4 ms must be tolerated by the evaluation. The test impulse, the switch-off time of the solenoid interlock can be extended depending on the cable length and the capacity of the cable used.

Configuration of the safety controller
If the solenoid interlock is connected to electronic safety-monitoring modules, we recommend that you set a discrepancy time of 100 ms. The safety inputs of the safety-monitoring module must be able to blank a test impulse of < 1 ms.

Information for the selection of suitable safety-monitoring modules can be found in the Schmersal catalogues or in the online catalogue on the Internet: products.schmersal.com.

5. Operating principles and coding

5.1 Mode of operation of the safety outputs

With the solenoid interlock AZM400, the unlock signals immediately switch off the safety outputs. The unlocked guard system can be locked again as long as the actuator is within the detection range of the solenoid interlock. In that case, the safety outputs are re-enabled.

If the safety outputs are already enabled, any error that does not immediately affect the functionality of the solenoid interlock (e.g. too high an ambient temperature, interference potential at the safety outputs, cross-wire short) will lead to a warning message, the disabling of the diagnostic output OUT of the ST version and OUT2 of the ST2 version and the delayed shutdown of the safety outputs. safety outputs are disabled if the error warning is active for 30 minutes. The signal combination, diagnostic output OUT of the ST version and OUT2 of the ST2 version disabled and safety channels still enabled, can be used to stop the production process in a controlled manner. After rectifying the fault, the fault message is acknowledged by opening and closing the associated safety door or by switching the operating voltage off and on again.

5.2 Actuator teaching / actuator detection

Solenoid interlocks with standard coding are ready to use upon delivery. Individually coded solenoid interlocks and actuators will require the following "teach-in" procedure:

1. Switch the solenoid interlock's voltage supply off and back on.
2. Introduce the actuator in the detection range. The teach-in procedure is signalled at the solenoid interlock, green LED off, red LED on, yellow LED flashes (1 Hz).
3. After 10 seconds, brief yellow cyclic flashes (5 Hz) request the switch-off of the operating voltage of the solenoid interlock. (If the voltage is not switched off within 5 minutes, the solenoid interlock cancels the "teach-in" procedure and signals a false actuator by 5 red flashes).
4. After the operating voltage is switched back on, the actuator must be detected once more in order to activate the taught actuator code. In this way, the activated code is definitively saved!

For ordering suffix -I1, the executed allocation of safety interlock and actuator is irreversible.

For ordering suffix -I2, the "teach-in" procedure for a new actuator can be repeated an unlimited number of times. When a new actuator is taught, the code, which was applicable until that moment, becomes invalid. Subsequent to that, an enabling inhibit will be active for ten minutes, thus providing for an increased protection against tampering. The green LED will flash until the expiration of the time of the enabling inhibit and the detection of the new actuator. In case of power failure during the lapse of time, the 10-minutes tampering protection time will restart.

⚠ Make organisational measures against possible manipulation with other actuators in case that a standard coded variant is used.

6. Diagnostic functions

6.1 Diagnostic-LEDs

The solenoid interlock signals the operating condition, as well as errors through 3-colour LEDs.

green (Power)	supply voltage on
yellow (Status)	operating condition
red (Fault)	Fault (see Table 2: Flash codes of the red diagnostic LED)

Arrangement of the LEDs

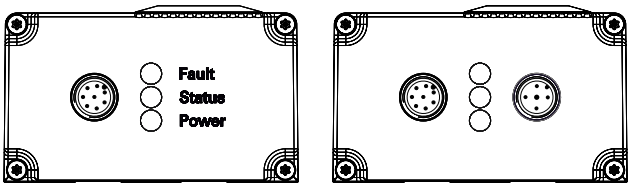

The short-circuit proof diagnostic output OUT or OUT1 and OUT2 of the ST2 version can be used for central visualisation or control functions, e.g. in a PLC. I It indicates the switching condition as shown in the table 1.

The diagnostic output OUT or OUT1 and OUT2 are not safety relevant outputs.

Error

Errors, which no longer guarantee the safe function of the solenoid interlock (internal error)s cause the safety outputs to be immediately disabled. Any error that does not immediately affect the safe functionality of the solenoid interlock (e.g. excess ambient temperature, safety output to external potential, short circuit) will lead to a delayed shut-down (refer to table 2). After the rectification of the error, the error message is reset by opening the corresponding safety guard. Errors on the control inputs do not cause the shut-down of the safety outputs.

Error warning

A fault has occurred, which causes the safety outputs to be disabled after 30 minutes (LED "fault" flashes, see Table 2). The safety outputs initially remain enabled (max. 30 min). This enables the shutdown of the process in a controlled manner. An error warning is deleted when the cause of error is eliminated.

6.2 Diagnostic information

Table 1: Diagnostic information of the solenoid interlock AZM400

System condition	Control system of the guard locking function	LED's			Safety outputs	Diagnostic outputs		
						ST version	ST2 version	
		green	red	yellow	Y1, Y2	OUT	OUT1	OUT2
Door open and unlocked (bolt retracted)	Unlock	On	Off	Off	0 V	0 V	0 V	0 V
Door closed and unlocked (bolt retracted)	Unlock	On	Off	Flashes	0 V	24 V	0 V	24 V
Door closed, lock action active (Bolt moving forwards)	Lock	On	Off	Flashes	0 V	0 V	0 V	24 V
Door closed and locked (Bolt extended)	Lock	On	Off	On	24 V	24 V	24 V	24 V
Door closed, unlocking action active (Bolt being retracted)	Unlock	On	Off	Flashes	0 V	0 V	24 V	24 V
Error states								
Error warning [1]	Without meaning	On	Flashes [2]	On	24 V	0 V	24 V	0 V
Error	Without meaning	On	Flashes [2]	Off	0 V	0 V	24 V	0 V
Mechanical auxiliary release, emergency release or Bowden cable release active	Without meaning	Flashes	Flashes	Flashes	0 V	24 V	0 V	24 V
Electronic manual release active	Without meaning	Flashes	Flashes	Flashes	0 V	-	0 V	0 V
Teaching the actuator at execution I1/I2								
Teach-in procedure actuator started	Unlock	Off	On	Flashes slowly	0 V	0 V	0 V	0 V
Actuator teaching can be completed	Unlock	Off	On	Flashes quickly	0 V	0 V	0 V	0 V
Only I2: Actuator has been taught (Manipulation protection time is running)	Unlock	Flashes	Off	Off	0 V	24 V	0 V	24 V

[1] after 30 min. disabling due to fault
[2] refer to flash code

Table 2: Error messages / flash codes red diagnostic LED

Flash codes (red)	Designation	Autonomous switch-off after	Error cause
1 flash pulse	Error (warning) at output Y1	30 min.	Fault in output test or voltage at output Y1, although the output is disabled.
2 flash pulses	Error (warning) at output Y2	30 min.	Fault in output test or voltage at output Y2, although the output is disabled.
3 flash pulses	Error (warning) cross-wire short	30 min.	Cross-wire short between the output cables or fault at both outputs
4 flash pulses	Error (warning) temperature too high	30 min.	The temperature measurement reveals an internal temperature that is too high
5 flash pulses	Actuator fault	0 min.	Incorrect or defective actuator
6 flash pulses	Electronic manual release	–	Invalid input condition of the control inputs and/or of the electronic manual release
7 flash pulses	Fault with the actuator detection	0 min.	Distance between the AZM400 and the actuator is too large; external magnetic fields prevent detection
8 flash pulses	Fault Block drive	0 min.	Actuator not properly aligned for the solenoid interlock
9 flash pulses	Fault over/under voltage	0 min.	Supply voltage outside specification
Continuous red	Internal error	0 min.	Device defective

7. Set-up and maintenance

7.1 Functional testing

The safety function of the safety components must be tested.
The following conditions must be previously checked and met:

1. Check max. axial misalignment of actuator and solenoid interlock.
2. Check max. angle displacement.
3. Make sure that it is not possible to lift the actuator in the Z axis above the extended bolt.
4. Check for tight installation of the actuator and the switch.
5. Fitting and integrity of the cable connections.
6. Check the switch enclosure for damage.
7. Remove particles of dust and soiling.
8. For versions with emergency exit, the following should also be considered: It must be possible to open the guard system from within the hazardous area; it must not be possible that the guard system is blocked from the inside.

7.2 Maintenance

In the case of correct installation and adequate use, the safety switchgear features maintenance-free functionality.
A regular visual inspection and functional test, including the following steps, is recommended:

1. Check for tight installation of the actuator and the switch.
2. Check max. axial misalignment of actuator and solenoid interlock.
3. Check max. angle displacement.
4. Make sure that it is not possible to lift the actuator in the Z axis above the extended bolt.
5. Fitting and integrity of the cable connections.
6. Check the switch enclosure for damage.
7. Remove particles of dust and soiling.



Measures must be taken to protect against manipulation or against the bypassing of safety device, for example, using an extra actuator.

Damaged or defective components must be replaced.

8. Disassembly and disposal

8.1 Disassembly

The safety switchgear must be disassembled in a de-energised condition only.

8.2 Disposal

The safety switchgear must be disposed of in an appropriate manner in accordance with the national prescriptions and legislations.

9. Appendix

9.1 Wiring examples

The application examples shown are suggestions. They however do not release the user from carefully checking whether the switchgear and its set-up are suitable for the individual application.

Wiring example 1: AZM400Z-ST

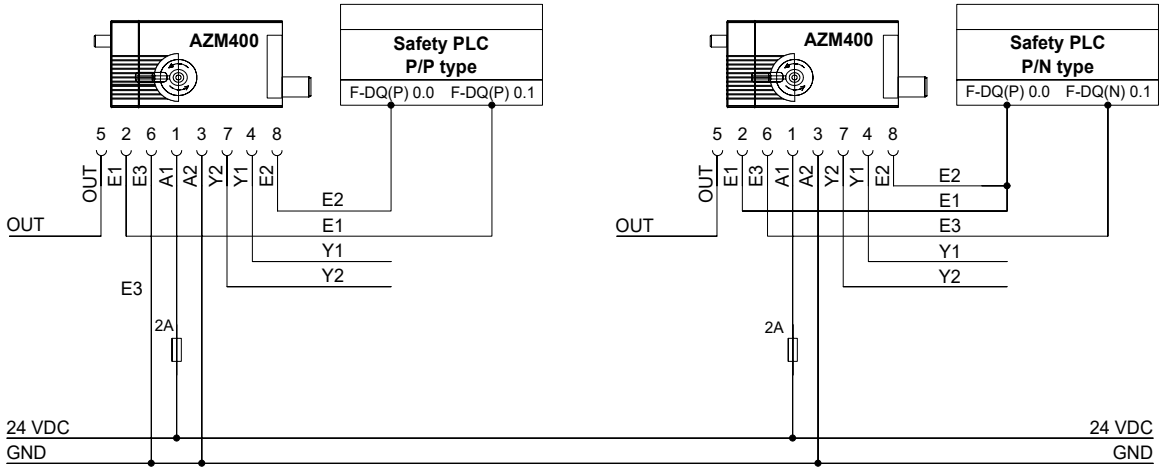

Key, wiring

Connector plug M12, 8-pole

A1: U_B
A2: GND
E1: Control input 1
E2: Control input 2
E3: Control input 3
Y1: Safety output 1
Y2: Safety output 2
OUT: Diagnostic output

Wiring example 2: AZM400Z-ST2

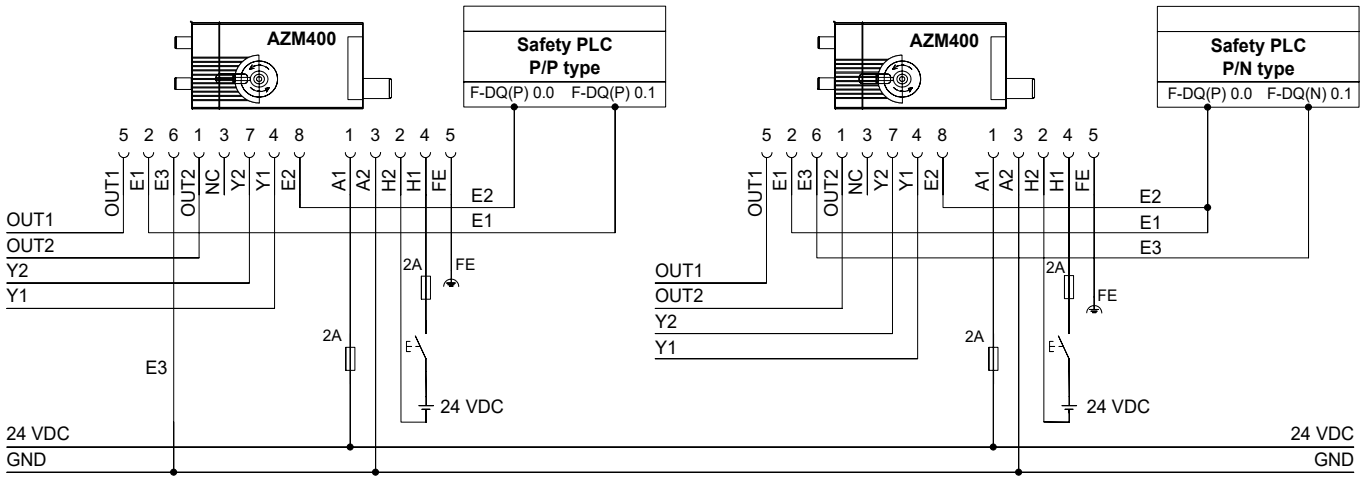

Key, wiring

Connector plug M12, 8-pole

E1: Control input 1
E2: Control input 2
E3: Control input 3
Y1: Safety output 1
Y2: Safety output 2
OUT1: Diagnostic output 1
OUT2: Diagnostic output 2

Connector plug M12, 5-pole

A1: U_B
A2: GND
H1: U_{he}
H2: GND_{he}
FE: Functional earth connection

9.2 Wiring configuration and accessories

Pin assignment of the version AZM400Z-ST-…
Connector plug M12, 8-pole

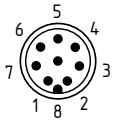

Function safety switchgear		Pin configuration of the connector	Colour code of the Schmersal connector to DIN 47100	Possible colour code of other commercially available connectors according to EN 60947-5-2
A1	U_B	1	WH	BN
E1	Control input 1	2	BN	WH
A2	GND	3	GN	BU
Y1	Safety output 1	4	YE	BK
OUT	Diagnostic output	5	GY	GY
E3	Control input 3	6	PK	PK
Y2	Safety output 2	7	BU	VT
E2	Control input 2	8	RD	OR

Pin assignment of the version AZM400Z-ST2-…
Connector plug M12, 8-pole

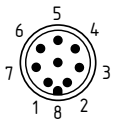

Function safety switchgear		Pin configuration of the connector	Colour code of the Schmersal connector to DIN 47100	Possible colour code of other commercially available connectors according to EN 60947-5-2
OUT2	Diagnostic output 2	1	WH	BN
E1	Control input 1	2	BN	WH
-	(Not connected)	3	GN	BU
Y1	Safety output 1	4	YE	BK
OUT1	Diagnostic output 1	5	GY	GY
E3	Control input 3	6	PK	PK
Y2	Safety output 2	7	BU	VT
E2	Control input 2	8	RD	OR

Connector plug M12, 5-pole

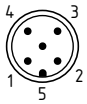

Function safety switchgear		Pin configuration of the connector	Colour code of the Schmersal connector to EN 60947-5-2	Possible colour code of other commercially available connectors according to DIN 47100
A1	U_B	1	BN	WH
H2	GND_{he}	2	WH	BN
A2	GND	3	BU	GN
H1	U_{he}	4	BK	YE
FE	Functional earth connection	5	GY	GY

Accessories: Pre-wired cables

Pre-wired cables with socket (female) M12, 8-pole – 8 x 0.25 mm²		Pre-wired cables with socket (female) M12, 5-pole – 5 x 0.34 mm²	
Cable length	**Ordering code**	**Cable length**	**Ordering code**
5.0 m	103007358	5.0 m	103010816
10.0 m	103007359	10.0 m	103010818

Further versions in other lengths and with angled cable exit are available upon request.

10. EU Declaration of conformity

EU Declaration of conformity

SCHMERSAL

Original

K.A. Schmersal GmbH & Co. KG
Möddinghofe 30
42279 Wuppertal
Germany
Internet: www.schmersal.com

We hereby certify that the hereafter described components both in their basic design and construction conform to the applicable European Directives.

Name of the component:	AZM400
Type:	See ordering code
Description of the component:	Interlocking device with safe locking function
Relevant Directives:	Machinery Directive 2006/42/EC RED-Directive 2014/53/EU RoHS-Directive 2011/65/EU
Applied standards:	EN 60947-5-3:2013 EN ISO 14119:2013 EN 300 330 V2.1.1:2017 EN ISO 13849-1:2015 IEC 61508 parts 1-7:2010
Notified body for the prototype test:	TÜV Rheinland Industrie Service GmbH Am Grauen Stein, 51105 Köln ID n°: 0035
EC-prototype test certificate:	01/205/5467.01/20
Person authorised for the compilation of the technical documentation:	Oliver Wacker Möddinghofe 30 42279 Wuppertal
Place and date of issue:	Wuppertal, August 14, 2020

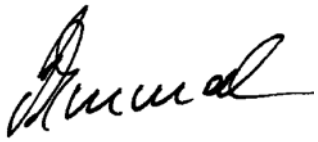

Authorised signature
Philip Schmersal
Managing Director

AZM400-E-EN

The currently valid declaration of conformity can be downloaded from the internet at products.schmersal.com.

K.A. Schmersal GmbH & Co. KG
Möddinghofe 30, 42279 Wuppertal
Germany
Phone: +49 202 6474-0
Telefax: +49 202 6474-100
E-Mail: info@schmersal.com
Internet :www.schmersal.com