MFT204

Full-metal magnetic sensor

MFG3060-BPKG/AM/V4A/G/US

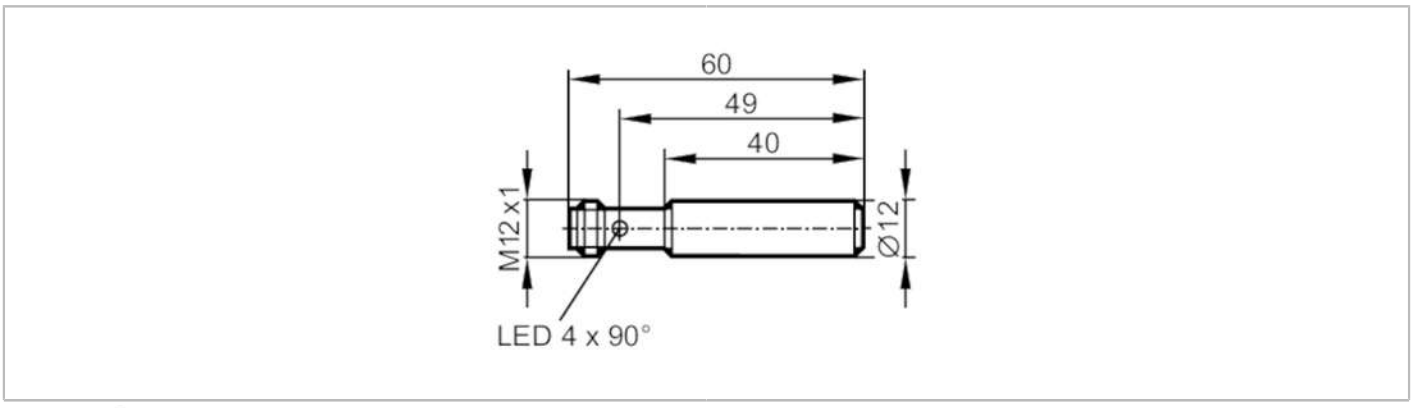

Product characteristics		
Electrical design		PNP
Output function		normally open
Sensing range	[mm]	60; (referred to magnet M 4.0)
Housing		cylindrical
Dimensions	[mm]	Ø 12 / L = 60
Application		
Special feature		Gold-plated contacts; Full-metal housing
Pressure rating	[bar]	100
Electrical data		
Operating voltage	[V]	10...30 DC
Current consumption	[mA]	< 10
Protection class		III
Reverse polarity protection		yes
Outputs		
Electrical design		PNP
Output function		normally open
Max. voltage drop switching output DC	[V]	2.5
Permanent current rating of switching output DC	[mA]	100
Switching frequency DC	[Hz]	5000
Short-circuit protection		yes
Overload protection		yes
Detection zone		
Sensing range	[mm]	60; (referred to magnet M 4.0)
Response sensitivity	[mT]	1.3
Accuracy / deviations		
Hysteresis	[% of Sr]	1...10
Operating conditions		
Ambient temperature	[°C]	0...100
Protection		IP 65; IP 68; IP 69K

MFT204

Full-metal magnetic sensor

MFG3060-BPKG/AM/V4A/G/US

Tests / approvals			
EMC		EN 61000-4-2 ESD	4 kV CD / 8 kV AD
		EN 61000-4-3 HF radiated	10 V/m
		EN 61000-4-4 Burst	2 kV
		EN 61000-4-5 Surge	0,5 kV line to line, Ri: 2 Ohm
		EN 61000-4-6 HF conducted	10 V
		EN 55011	class B
		DIN ISO 11452-2	100 V/m

Mechanical data		
Weight	[g]	21.5
Housing		cylindrical
Dimensions	[mm]	Ø 12 / L = 60
Materials		housing: stainless steel (1.4404 / 316L); sensing face: stainless steel (1.4404 / 316L)
Full-metal housing		yes

Displays / operating elements		
Display	switching status	1 x LED, yellow

Remarks	
Pack quantity	1 pcs.

Electrical connection - plug

Connector: 1 x M12; coding: A; Contacts: gold-plated



Connection

