E20739

Reflector for retro-reflective sensors

REFLECTOR TS-80X80

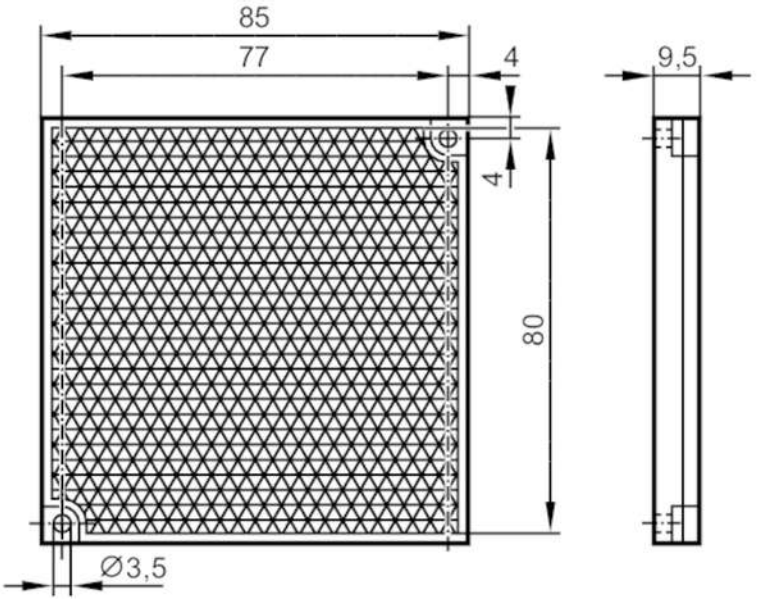

Application		
Design		rectangular, for red light and infrared light retro-reflective sensors
Operating conditions		
Ambient temperature	[°C]	-10...60
Mechanical data		
Weight	[g]	44.5
Dimensions	[mm]	85 x 85 x 9.5
Reflector surface	[mm]	80 x 80
Materials		plastics
Remarks		
Pack quantity		1 pcs.