DATASHEET - DS7-342SX012N0-N



Soft starter, 12 A, 200 - 480 V AC, Us= 110 - 230 V AC, Frame size FS1

Part no.	**DS7-342SX012N0-N**
Catalog No.	**134929**
Alternate Catalog No.	**DS7-342SX012N0-N**
EL-Nummer (Norway)	**0004134270**

Delivery program

Description			With internal bypass contacts
Function			Soft starters for three-phase loads
Mains supply voltage (50/60 Hz)	U_{LN}	V AC	200 - 480
Supply voltage	U_s		110 - 230 V AC
Control voltage	U_C		110 - 230 V AC
Assigned motor rating (Standard connection, In-Line)			
at 400 V, 50 Hz	P	kW	5.5
at 460 V, 60 Hz	P	HP	10
Rated operational current			
AC-53	I_e	A	12
Rated operational voltage	U_e		200 V 230 V 400 V 480 V
Connection to SmartWire-DT			no
Frame size			FS1

Technical data

General

Standards			IEC/EN 60947-4-2 UL 508 CSA22.2-14
Approvals			CE
Approvals			UL CSA C-Tick UkrSEPRO
Climatic proofing			Damp heat, constant, to IEC 60068-2-3 Damp heat, cyclic, to IEC 60068-2-10
Ambient temperature			
Operation	ϑ	°C	-5 - +40 up to 60 at 2% derating per Kelvin temperature rise
Storage	ϑ	°C	-25 - +60
Altitude		m	0 - 1000 m, above that 1 % derating per 100 m , up to 2000 m
Mounting position			Vertical
Degree of protection			
Degree of Protection			IP20
Protection against direct contact			Finger- and back-of-hand proof
Overvoltage category/pollution degree			II/2
Shock resistance			8 g/11 ms
Vibration resistance to EN 60721-3-2			2M2
Radio interference level (IEC/EN 55011)			A
Static heat dissipation, non-current-dependent	P_{vs}	W	0.6
Weight		kg	0.4

Main conducting paths

Rated operating voltage	U_e	V AC	200 - 480
Supply frequency	f_{LN}	Hz	50/60

Rated operational current	I_e	A	
AC-53	I_e	A	12
Assigned motor rating (Standard connection, In-Line)			
at 230 V, 50 Hz	P	kW	3
at 400 V, 50 Hz	P	kW	5.5
at 200 V, 60 Hz	P	HP	3
at 230 V, 60 Hz	P	HP	3
at 460 V, 60 Hz	P	HP	10
Overload cycle to IEC/EN 60947-4-2			
AC-53a			12 A: AC-53a: 3 - 5: 75 - 10
Internal bypass contacts			✓
Short-circuit rating			
Type “1” coordination			PKM0-12 (+ CL-PKZ0)
Type „2“ coordination (additional with the fuses for coordination type „1“)			3 x 170M1362
Fuse base (number x part no.)			3 x 170H1007

Terminal capacities

Cable lengths			
Solid		mm^2	1 x (0.75 - 4) 2 x (0.75 - 2.5)
Flexible with ferrule		mm^2	1 x (0.75 - 2.5) 2 x (0.75 - 2.5)
Solid or stranded		AWG	18 - 10
Tightening torque		Nm	1.2
Screwdriver (PZ: Pozidriv)		mm	PZ2; 1 x 6 mm
Control cables			
Solid		mm^2	1 x (0.75 - 4) 2 x (0.75 - 2.5)
Flexible with ferrule		mm^2	1 x (0.75 - 2.5) 2 x (0.75 - 2.5)
Solid or stranded		AWG	18 - 10
Tightening torque		Nm	1.2
Screwdriver		mm	0,8 x 5,5 1 x 6

Control circuit

Digital inputs			
Control voltage			
AC operated		V AC	110 V AC - 15 % - 230 V AC +10 %
Current consumption 24 V		mA	
External 24 V		mA	1.6
Current consumption 230 V		mA	4
Pick-up voltage		x U_s	
AC operated		V AC	108 - 253
Drop-out voltage	x U_s		
AC operated		V AC	0 - 15
Pick-up time			
AC operated		ms	250
Drop-out time			
AC operated		ms	350
Regulator supply			
Voltage	U_s	V	110 V AC -15 % - 230 V AC +10 %
Current consumption	I_e	mA	50
Notes			External supply voltage
Relay outputs			
Number			1 (TOR)
Voltage range		V AC	= **U_s**
AC-11 current range		A	1 A, AC-11

Soft start function

Ramp times			
Acceleration		s	1 - 30
Deceleration		s	0 - 30
Start voltage (= turn-off voltage)		%	30 100
Start pedestal		%	30 - 100
Fields of application			
Fields of application			Soft starting of three-phase asynchronous motors
1-phase motors			●
3-phase motors			✓

Functions

Fast switching (semiconductor contactor)			- (minimum ramp time 1s)
Soft start function			✓
Reversing starter			External solution required
Suppression of closing transients			✓
Suppression of DC components for motors			✓
Potential isolation between power and control sections			✓

Notes

Rated impulse withstand voltage:

- 1.2 µs/50 µs (rise time/fall time of the pulse to IEC/EN 60947-2 or -3)
- Applies for control circuit/power section/enclosure

Design verification as per IEC/EN 61439

Technical data for design verification			
Rated operational current for specified heat dissipation	I_n	A	12
Heat dissipation per pole, current-dependent	P_{vid}	W	0
Equipment heat dissipation, current-dependent	P_{vid}	W	0.6
Static heat dissipation, non-current-dependent	P_{vs}	W	0.6
Heat dissipation capacity	P_{diss}	W	0
Operating ambient temperature min.		°C	-5
Operating ambient temperature max.		°C	40
IEC/EN 61439 design verification			
10.2 Strength of materials and parts			
10.2.2 Corrosion resistance			Meets the product standard's requirements.
10.2.3.1 Verification of thermal stability of enclosures			Meets the product standard's requirements.
10.2.3.2 Verification of resistance of insulating materials to normal heat			Meets the product standard's requirements.
10.2.3.3 Verification of resistance of insulating materials to abnormal heat and fire due to internal electric effects			Meets the product standard's requirements.
10.2.4 Resistance to ultra-violet (UV) radiation			Meets the product standard's requirements.
10.2.5 Lifting			Does not apply, since the entire switchgear needs to be evaluated.
10.2.6 Mechanical impact			Does not apply, since the entire switchgear needs to be evaluated.
10.2.7 Inscriptions			Meets the product standard's requirements.
10.3 Degree of protection of ASSEMBLIES			Does not apply, since the entire switchgear needs to be evaluated.
10.4 Clearances and creepage distances			Meets the product standard's requirements.
10.5 Protection against electric shock			Does not apply, since the entire switchgear needs to be evaluated.
10.6 Incorporation of switching devices and components			Does not apply, since the entire switchgear needs to be evaluated.
10.7 Internal electrical circuits and connections			Is the panel builder's responsibility.
10.8 Connections for external conductors			Is the panel builder's responsibility.
10.9 Insulation properties			
10.9.2 Power-frequency electric strength			Is the panel builder's responsibility.
10.9.3 Impulse withstand voltage			Is the panel builder's responsibility.
10.9.4 Testing of enclosures made of insulating material			Is the panel builder's responsibility.
10.10 Temperature rise			The panel builder is responsible for the temperature rise calculation. Eaton will provide heat dissipation data for the devices.
10.11 Short-circuit rating			Is the panel builder's responsibility. The specifications for the switchgear must be observed.

10.12 Electromagnetic compatibility			Is the panel builder's responsibility. The specifications for the switchgear must be observed.
10.13 Mechanical function			The device meets the requirements, provided the information in the instruction leaflet (IL) is observed.

Technical data ETIM 7.0

Low-voltage industrial components (EG000017) / Soft starter (EC000640)

Electric engineering, automation, process control engineering / Low-voltage switch technology / Load breakout, motor breakout / Semiconductor motor controller or soft starter (ecl@ss10.0.1-27-37-09-07 [ACO300011])

Rated operation current Ie at 40 °C Tu		A	12
Rated operating voltage Ue		V	230 - 460
Rated power three-phase motor, inline, at 230 V		kW	3
Rated power three-phase motor, inline, at 400 V		kW	5.5
Rated power three-phase motor, inside delta, at 230 V		kW	0
Rated power three-phase motor, inside delta, at 400 V		kW	0
Function			Single direction
Internal bypass			Yes
With display			No
Torque control			No
Rated surrounding temperature without derating		°C	40
Rated control supply voltage Us at AC 50HZ		V	110 - 230
Rated control supply voltage Us at AC 60HZ		V	110 - 230
Rated control supply voltage Us at DC		V	0 - 0
Voltage type for actuating			AC
Integrated motor overload protection			No
Release class			Other
Degree of protection (IP)			IP20
Degree of protection (NEMA)			1

Approvals

Product Standards			IEC/EN 60947-4-2; GB 14048.6; UL 508; CSA-C22.2 No 0-M91; CSA-C22.2 No 14-05 CE marking
UL File No.			E251034
CSA File No.			2511305
CSA Class No.			321106
Specially designed for North America			No
Suitable for			Branch circuits
Current Limiting Circuit-Breaker			No
Max. Voltage Rating			480 V
Degree of Protection			IP20; UL/CSA Type 1

Dimensions

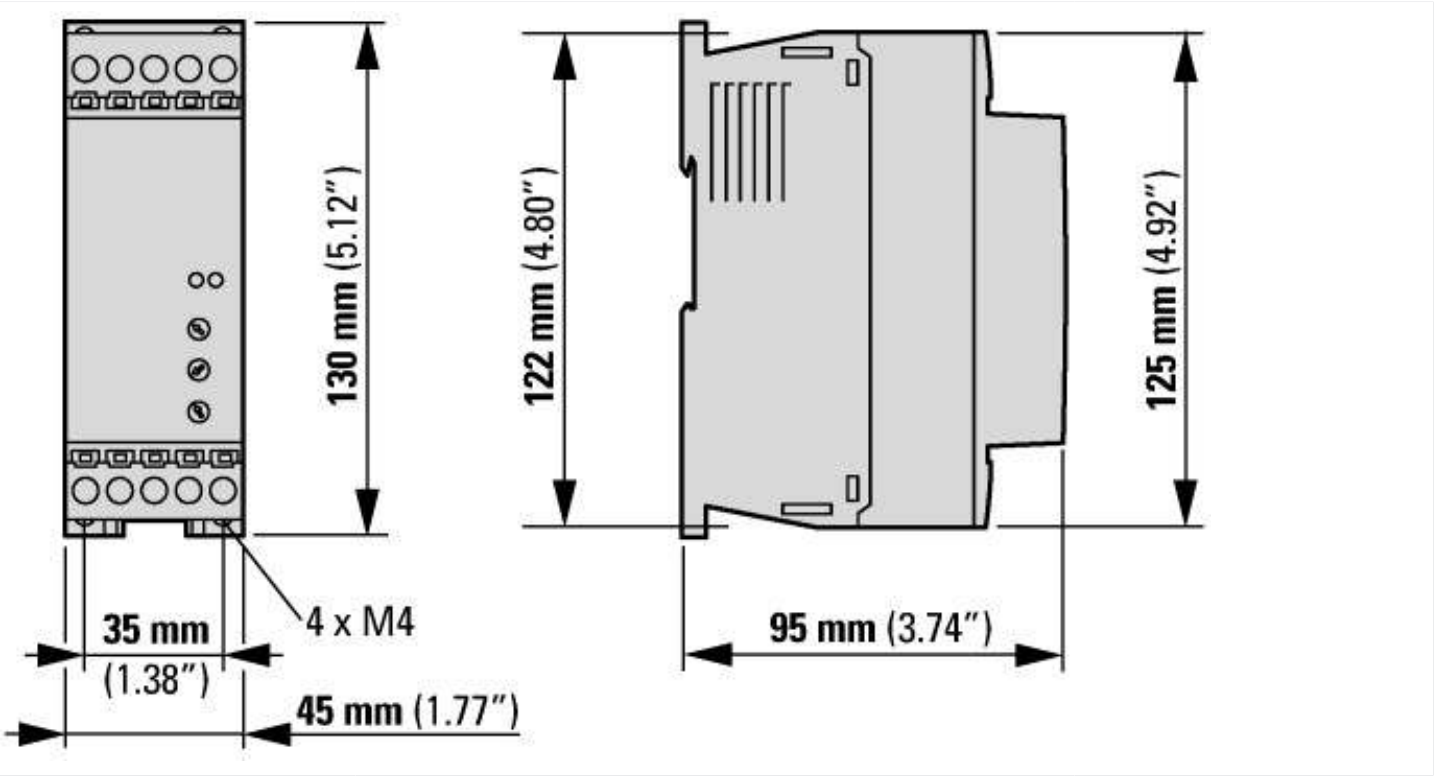

Additional product information (links)

IL03902003Z Instructions for DS7 Soft Starter	
IL03902003Z Instructions for DS7 Soft Starter	https://es-assets.eaton.com/DOCUMENTATION/AWA_INSTRUCTIONS/IL03902003Z2020_10.pdf
MN03901001Z Manual DS7 soft starters	
MN03901001Z Handbuch DS7 Sanftstarter - Deutsch	https://es-assets.eaton.com/DOCUMENTATION/AWB_MANUALS/MN03901001Z_DE.pdf
MN03901001Z Manual DS7 soft starters - English	https://es-assets.eaton.com/DOCUMENTATION/AWB_MANUALS/MN03901001Z_EN.pdf
MN03901001Z Manuale Softstarter DS7 - italiano	https://es-assets.eaton.com/DOCUMENTATION/AWB_MANUALS/MN03901001Z_IT.pdf
CA04020001Z_EN-INT Product range catalog: Efficient Engineering for starting and controlling motors.	http://www.eaton.eu/ecm/groups/public/@pub/@europe/@electrical/documents/content/pct_1095238.pdf

© 02/2021 by Eaton Industries GmbH