212824
MB-DIF-R-125
Diffusor

- Diffusion filter
- For a homogeneous light reduction and illumination
- Quick and easy mounting



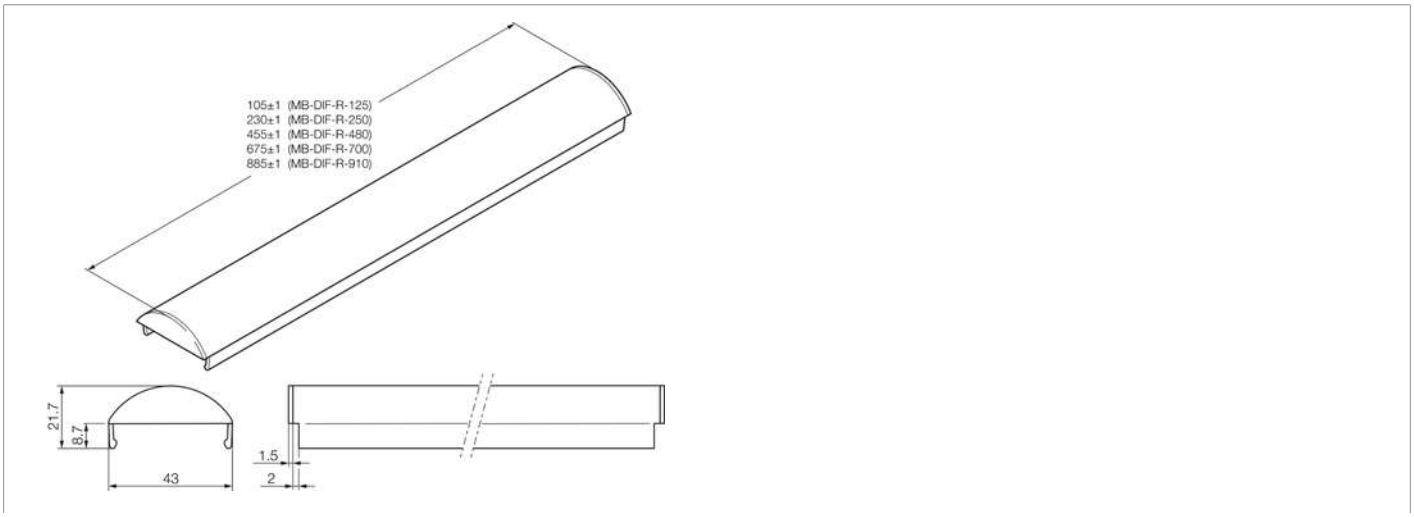

Technical data (typ.)	+20°C
Illuminated area	105 x 43 mm
Mounting	Using clamping groove
Material	PC diffuse (Window)
Weight	15 g
Component	Diffusor panel
To be used for	MB-N-125 ...

More information / accessories	https://www.di-soric.com/212824

© di-soric . Right to change reserved