# 6255 ~ 'Mistral' Industrial Foot Air Valve



**Benefits**

- The Mistral heavy industrial foot air valve offers high performance and style
- Available in a choice of colour combinations and valve options including valve port threads
- Special colours available for volume OEM customers
- Robust construction from die-cast aluminium
- The guard is large enough to allow the operator to wear industrial protective shoes
- Competitively priced for OEM users
- Mechanical performance $10^6$+ operations

**Guard Option**

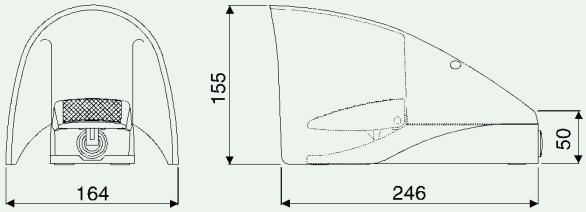


**Cover Option**

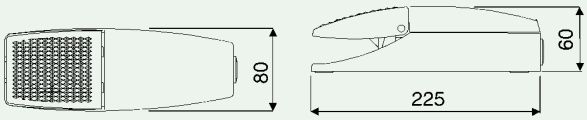


**6255 - [ ] A A A - [ ] A Z 0**

**1. Model Number**

**2. Cover and Guard Colours**

| | | | |
|---|---|---|---|
| A | Cover - Yellow | B | Guard - Yellow |
| C | Cover - White | D | Guard - White |
| E | Cover - Blue | F | Guard - Blue |
| G | Cover - Orange | H | Guard - Orange |
| M | Cover - Red | N | Guard - Red |

**3. Base Colour**
A Black

**4. Base Configuration**
A Entrance ports on each side of base

**5. Tread Colour**
A Black

**6. Valve Action**
A Momentary 5/2 Valve 1/8" BSP ISO R228 Standard
B Momentary 5/2 Valve 1/8" NPT
C Momentary 3/2 Valve 1/8" BSP ISO R228 Standard
D Momentary 3/2 Valve 1/8" NPT

**Note:** Options C and D are supplied with one blanking plug

**7. Pneumatic Rating**
A Maximum Operating Pressure 10 Bar
Temperature -20˚C to +80˚C.
Flow Rate at 6 Bar 19dm$^3$ / Sec 40 SCFM


As a consequence of our policy of continual improvement, we reserve the right to change without notice any detail in this publication. Please see our Conditions of Sale.

# 6255 ~ 'Mistral' Industrial Foot Air Valve

| Technical Data | |
|---|---|
| Maximum Operating Pressure | 10 bar (145 PSI / 1000kPa) |
| Temperature Range | -20˚C to + 80˚C (-40˚F to +176˚F) |
| Air Condition | Filtered to 40 microns lubricated or dry |
| Flow Rate at 6 Bar (87 PSI / 600kPa) | 19dm³ / sec (40 SCFM) |
| Ports | ISO R228 (1/8" BSP) standard or NPT |
| Weights | Cover/Unguarded 800grms / Guarded 1.5kg |

**Connection Information**

**Valve connected as a 3/2 Normally Closed valve**

- The air supply should be connected to Port 1.
- Port 2 is redundant and should be plugged with the plug fitting supplied.
- The outlet is connected to Port 4.
- Ports 3 and 5 are exhaust ports and should be left open to atmosphere or fitted with silencers. See note below.

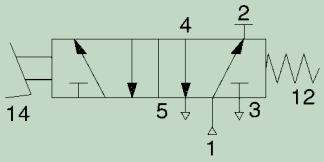


**Valve connected as 3/2 Normally Open valve**

- The air supply should be connected to Port 1.
- Port 4 is redundant and should be plugged with the plug fitting supplied.
- The outlet is connected to Port 2.
- Ports 3 and 5 are exhaust ports and should be left open to atmosphere or fitted with silencers. See note below.

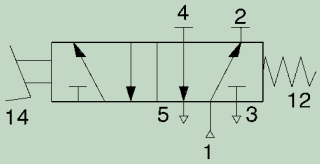


**Valve connected as 5/2 valve**

- The air supply should be connected to Port 1.
- Ports 2 and 4 are outlet or cylinder ports.
- Ports 3 and 5 are exhaust ports and should be left open to atmosphere or fitted with silencers. See note below.

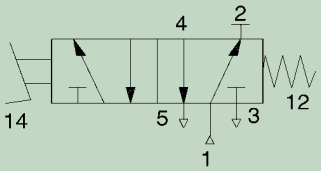


**Note:** We recommend that the exhaust ports of the valve are fitted with silencers. These will reduce the noise of the exhausting air and prevent dirt entering the valve.

A kit of 6mm fittings including elbows and silencers is available from herga, please quote part number 6050-5500-0029.

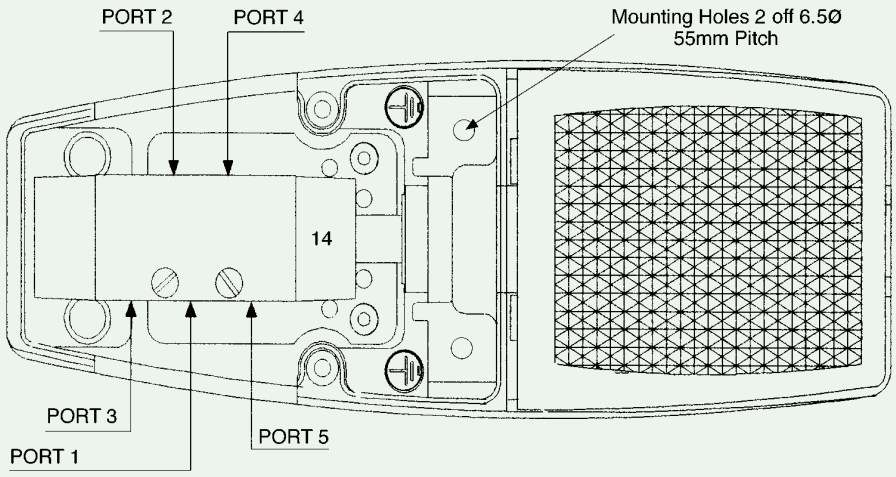


Shown at approximately ½ Scale


As a consequence of our policy of continual improvement, we reserve the right to change without notice any detail in this publication. Please see our Conditions of Sale.