3/2-directional valve, electrically operated, Series AS5-SOV

R412009265

General series information
Series AS5

- The AVENTICS Series AS5 is a modular, versatile maintenance unit for universal application. This Series offers compact dimensions, is highly efficient, lightweight and easy-to-use. The AVENTICS Series AS guarantees reliability, safety, and efficiency with a simplified assembly and maintenance efforts.



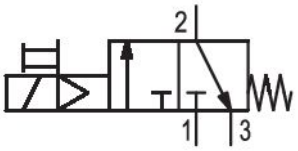

Technical data

Industry	Industrial
Activation	Electrically
Nominal flow Qn	12500 l/min
Compressed air connection	G 3/4
Working pressure min.	2.5 bar
Working pressure max	10 bar
DC operating voltage	24 V
Sealing principle	soft seal
Connection type	Pipe connection
Parts	3/2-directional valve
Can be assembled into blocks	Can be assembled into blocks
basic valve with electrical connector	Basic valve with pilot valve
Type	Poppet valve

Min. ambient temperature	-10 °C
Max. ambient temperature	50 °C
Medium	Compressed air Neutral gases
Max. particle size	5 µm
Compressed air connection, exhaust	G 1/2
Nominal flow Qn 1 to 2	12500 l/min
Nominal flow Qn 2 to 3	3700 l/min
Operating voltage	24 V DC
Power consumption DC	2 W
Duty cycle	100 %
Connector standard	ISO 15217
Protection class with connection	IP65
Reverse polarity protection	Protected against polarity reversal
Electrical connection type 2	Plug
Electrical connection 2, thread size	ISO 15217, form C
Weight	0.677 kg

Material

Housing material	Polyamide
Seal material	Acrylonitrile butadiene rubber
Material threaded bushing	Die cast zinc
Material front plate	Acrylonitrile butadiene styrene
Part No.	R412009265

Technical information

The pressure dew point must be at least 15 °C less than ambient and medium temperature and may not exceed 3 °C.

Nominal flow Qn with secondary pressure p2 = 6 bar at Δp = 1 bar

A change in the flow direction (from air supply on the left to air supply on the right) occurs by rotating installation by 180° about the vertical axis. Please see the operating instructions for further details.

Dimensions in mm

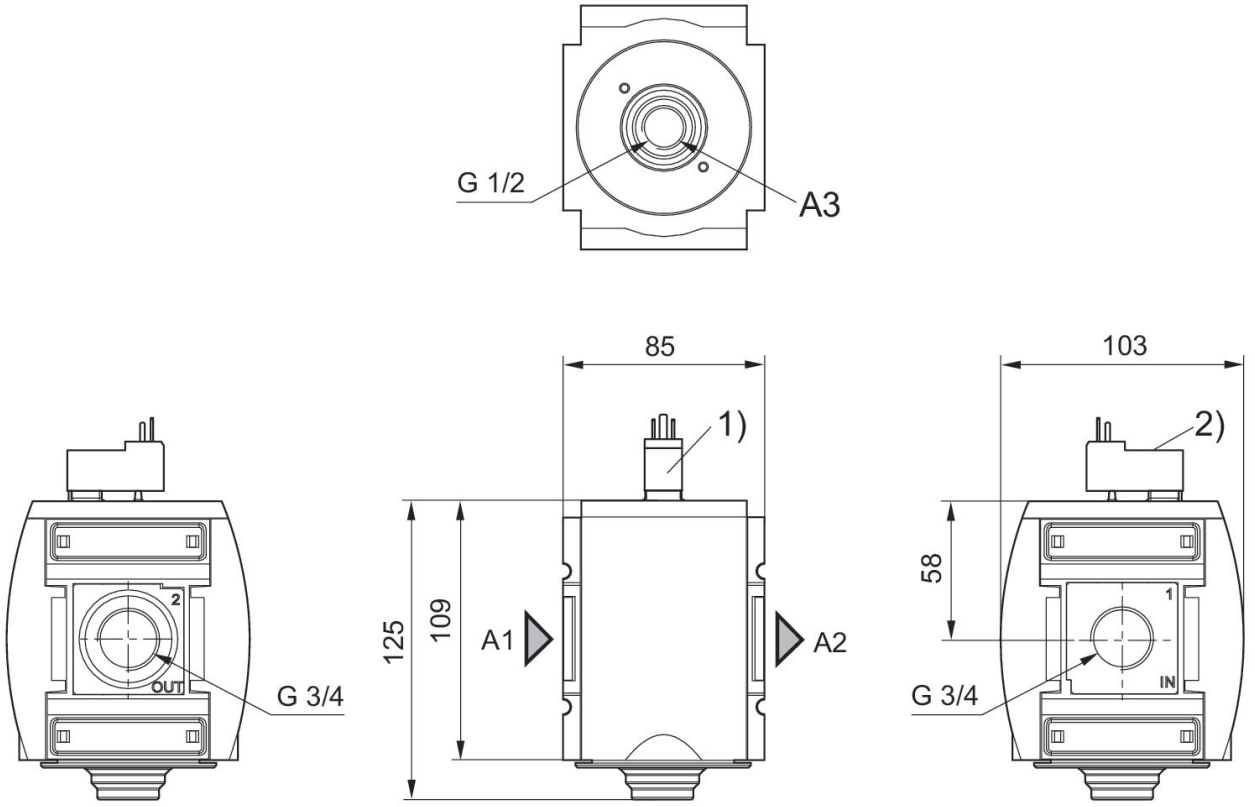

A1 = input
A2 = output
A3 = ventilation port
1) For valve plug connectors according to ISO 15217 (form C)
2) Manual override

Flow rate characteristic

p2 = 0,05 - 7 bar, 1 > 2

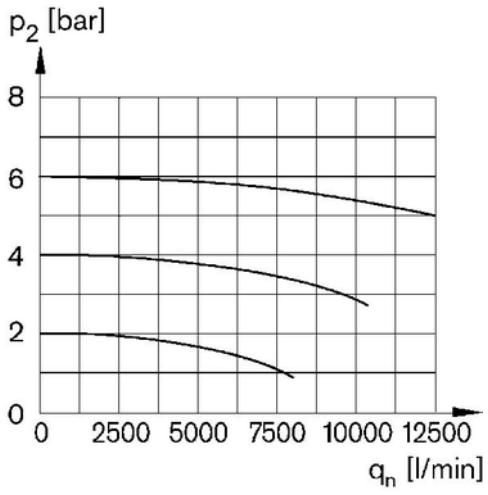

p2 = Secondary pressure
qn = Nominal flow

Rear exhaust

2 > 3

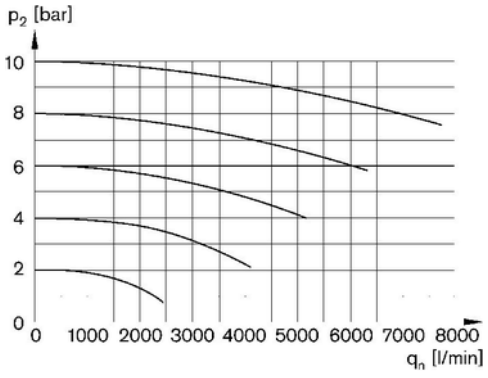

p2 = Secondary pressure
qn = Nominal flow

Accessories overview

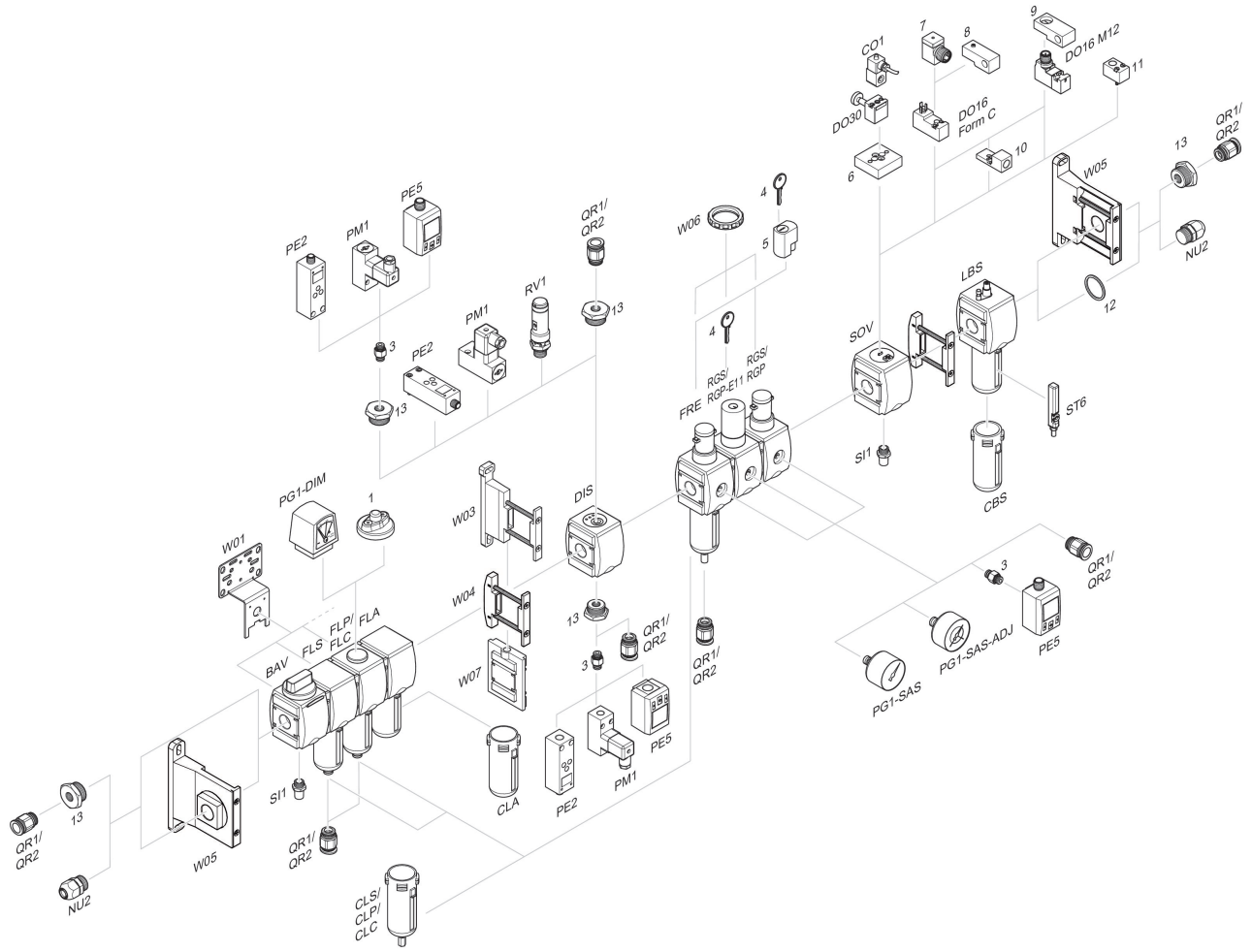

1 = contamination display 3 = Double nipple 4 = Key for E11 locking 5 = mortise lock 6 = Transition plate DO30 7 = Adapter, Series CON-VP 8 = Mounting aid DO16, form C 9 = Mounting aid DO16, M12 10 = Adapter for external pilot air 11 = Adapter pneumatic operation 12 = Sealing ring 13 = Reducing nipple