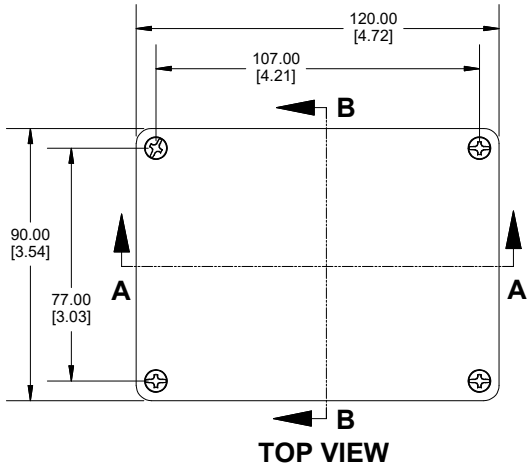

TOP VIEW

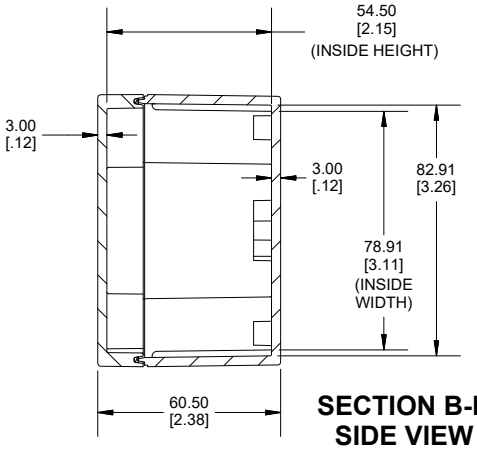

SECTION B-B
SIDE VIEW

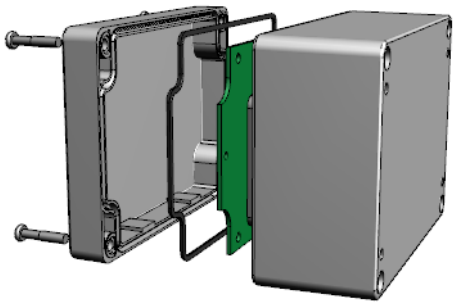

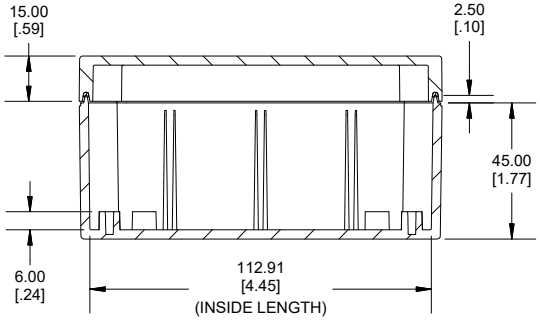

SECTION A-A
SIDE VIEW

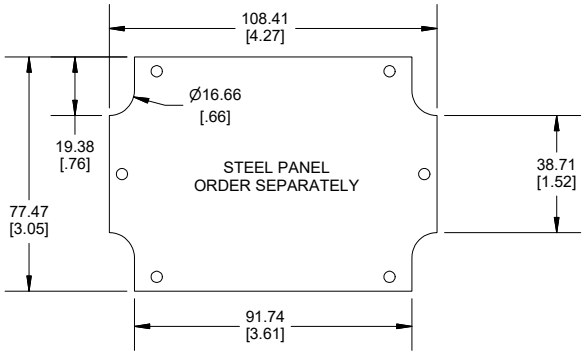

POLYCARBONATE
VERSION ONLY
c UL us LISTED
FILE #E65324
TYPE 4,4X,6,6P

Enclosures can be Factory Modified (Milling, Drilling, Printing etc.)
Contact Factory (modshop@hammfg.com) for quotes
Solid models of this enclosure available in .stp or .x_t
(Part number and text placement/orientation on our products are subject to change, we do not recommend using them as a locating reference for modification purposes)

NOTE
Purchased assembly includes box, lid, 4 cover screws, and preformed silicone gasket.
General Purpose ABS version is not UL approved. (Matl UL94 - HB)
Polycarbonate version is UL 508A approved. (Matl UL94 - 5VA @ 3mm)
Recommended Cover screw torque -- 43-57 ozf-in (30-40 cN-m)

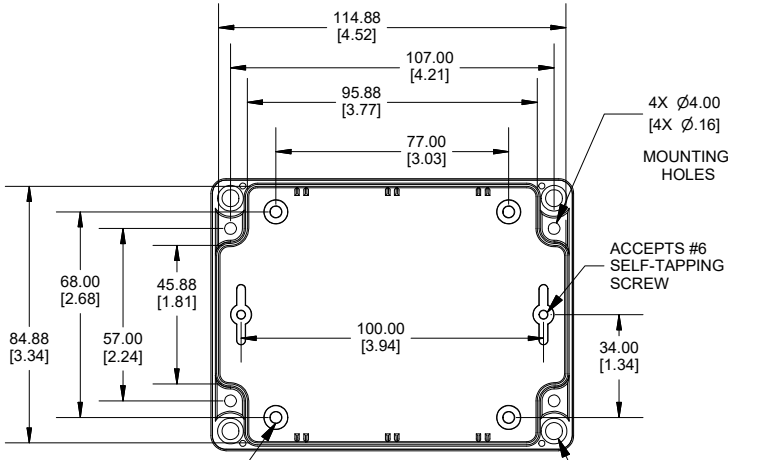

INSIDE BOX

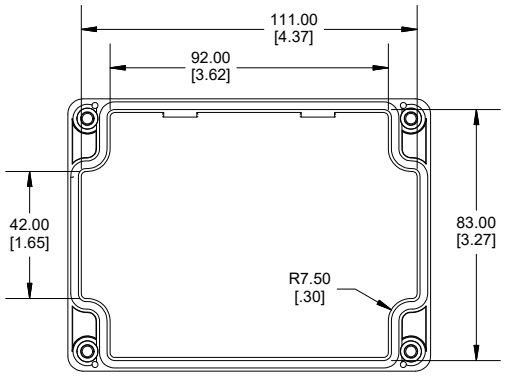

INSIDE LID

1554F	
1554F Regular Enclosure	
General Purpose ABS RAL-7035	1554FGY
Polycarbonate RAL-7035	1554F2GY
1554F Clear / Smoke Lid Enclosure	
Polycarbonate Box / Clear Polycarbonate Lid	1554F2GYCL
Polycarbonate Box / Smoke Polycarbonate Lid	1554F2GYSL
ACCESSORIES	
Steel Inner Panels	1554FPL
Steel Panel / P.C. Board Screw [M3-0.5 x 8mm Plated] (Pkg 100)	1591MM100
Steel Panel / P.C. Board Self Tapping Screw [#6 X 1/4" (6.4mm) Plated] (Pkg 100)	1598ATS100
Stainless Steel Cover Screws [M4-0.7 X 20mm] (Pkg 50)	SC576-50
Silicone Pre-formed Gasket Black (Pkg 2)	1554FGASKET

Dimensions:
mm
[inches]

HAMMOND MANUFACTURING ®

1554F

www.hammondmfg.com

REV:28.02.2020