GF854S

Fail-safe inductive sensor

GIFK4004-2PO/SIL2/US

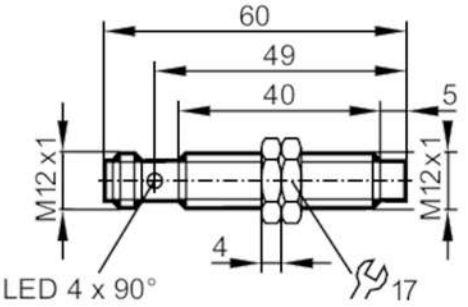

Product characteristics		
Electrical design		PNP
Output function		2 x OSSD (A1 and A2)
Enable zone	[mm]	> 6
Housing		threaded type
Dimensions	[mm]	M12 x 1 / L = 60
Application		
Special feature		Gold-plated contacts
Type of operation		permanent operation
Safety-related function		safe state when damped correctly
Application		Use in mobile and harsh applications
Electrical data		
Operating voltage	[V]	8...32 DC
Rated insulation voltage	[V]	60
Current consumption	[mA]	< 20
Protection class		III
Reverse polarity protection		yes
Max. power-on delay time	[ms]	1000
Outputs		
Electrical design		PNP
Output function		2 x OSSD (A1 and A2)
Max. voltage drop switching output DC	[V]	2.5; (30 mA)
Minimum load current	[mA]	1
Permanent current rating of switching output DC	[mA]	50
Switching frequency DC	[Hz]	10
Output data		Interface type C class 1
Output voltage at 24 V		compatible with EN 61131-2 inputs type 1, 2
Short-circuit protection		yes
Overload protection		yes
Max. capacitive load CL_max	[nF]	20

GF854S

Fail-safe inductive sensor

GIFK4004-2PO/SIL2/US

Detection zone		
Enable zone	[mm]	> 6
Safe switch-off distance s(ao)	[mm]	< 3
Accuracy / deviations		
Correction factor		steel: 1 / stainless steel: 0.7 / brass: 0.4 / aluminium: 0.4 / copper: 0.3
Hysteresis	[% of Sr]	1...10
Response times		
Response time to safety request	[ms]	5
Response time when approaching the enable zone	[ms]	5
Risk time (response time for safety-related faults)	[ms]	100
Operating conditions		
Ambient temperature	[°C]	-40...85
Max. relative air humidity	[%]	50; (70 °C; <70 °C: >50 %)
Max. height above sea level	[m]	5000
Ionising radiation		not permissible
Protection		IP 65; IP 67; IP 68; IP 69K; (with ifm socket duly screwed on)

GF854S

Fail-safe inductive sensor

GIFK4004-2PO/SIL2/US

Chemical media	test according to ISO 16750-5	
	the following media were tested for 22 hours at 60 °C	coolants
		(HoughtonHocut4480
		Oemeta
		HYCUT ET 46)
	The following media were tested for 22 hours at 75 °C	hydraulic fluids
		(Fuchs Renoling B15 VG 46 HLP
		Total BiohydranTMP 4HEES
		Fuchs Hydrotherm 46 M HFC)
		transmission oils
		(Fuchs TITAN ATF 3353 Dexron III)
		diesel
		biodiesel
		urea
		(AdBlue)
		brake fluid
		(K2 TURBO DOT 4)
	the following media were tested for 22 hours at 23 °C	corrosion protection
		(Sonax special preservation wax)
		cold cleaner
		(Sonax cold cleaner S)
		ammonia-based cleaner
		(Weco Dr. Webers Salmiak-Konzentrat (concentrated ammonium chloride))
		battery acid
	the following media were tested for 2 hours at 23 °C	wheel rim cleaner
		(Sonax Xtreme Plus)
	the following media were tested for 10 minutes at 23 °C	premium-grade petrol lead-free

GF854S

Fail-safe inductive sensor

GIFK4004-2PO/SIL2/US

Tests / approvals			
EMC		industrial environments	
		EN 60947-5-3	
		EN 61000-4-2 ESD	6 kV CD / 8 kV AD
		EN 61000-4-3 HF radiated	20 V/m
		EN 61000-4-4 Burst	2 kV
		EN 61000-4-5 Surge	2 kV
		EN 61000-4-6 HF conducted	10 V
		EN 61000-4-8	30 A/m 50/60 Hz / 1000 A/m 0 Hz
		EN 55011	class B
		mobile applications	only for operation with central load-dump suppression (58 V) / not for active operation during motor start phase in 12 V systems
		ISO 10605 ESD	8 kV CD / 15 kV AD
		ISO 11452-2, ISO 11452-5 radiated immunity	100 V/m
		ISO 7637-2, ISO 16750-2 conducted immunity	12 V / 24 V
		pulse	1 2a 3a 3b 4 5b
		severity level	III III III III III III 58V
		failure criterion	B B B A A C/B A
		EN 55025	
Vibration resistance		EN 60068-2-6 Fc	20 g (10...3000 Hz) / 50 sweep cycles, 1 octave per minute, in 3 axes
Broadband noise		EN 60068-2-64 h	5,9 g (10...2000 Hz) / effective acceleration for chassis mounting
Shock resistance		EN 60068-2-27 Ea	100 g 11 ms half-sine; 3 shocks each in every direction of the 3 coordinate axes
Continuous shock resistance		EN 60068-2-27 Ea	40 g 6 ms; 4000 shocks each in every direction of the 3 coordinate axes
Fast temperature change		EN 60068-2-14 Na	TA = -40°C; TB = 85°C; t1 = 30 min; t2 = 10 s 100 cycles
Salt spray test		EN 60068-2-52 Kb	severity level 5 (4 test cycles)
Safety classification			
Complies with the requirements		ISO 13849-1: 2015 category 2, PL d	
		IEC 61508 SIL 2	
		IEC 62061 SIL 2	
Mission time TM	[h]	≤ 87600	
Mission time TM (additional indication)		industrial environments Temperature range -25...70 °C ≤ 175200	
PFH	[1/h]	< 5E-08	
Mechanical data			
Weight	[g]	86.8	
Housing		threaded type	
Mounting		non-flush mountable	
Dimensions	[mm]	M12 x 1 / L = 60	
Thread designation		M12 x 1	
Materials		threaded sleeve: brass white bronze coated; sensing face: LCP; LED window: PEI; lock nuts: brass white bronze coated	
Tightening torque	[Nm]	< 7	

GF854S

Fail-safe inductive sensor

GIFK4004-2PO/SIL2/US

Displays / operating elements		
Display	Display switching status	4 LED, yellow
Accessories		
Items supplied	lock nuts: 2	
Remarks		
Remarks	material for secure mounting not supplied; fixing must be done by the user	
	meets the environmental and EMC requirements for operation in agricultural and forestry machinery, earthworks and construction machines as well as in industrial trucks	
	When used in industrial trucks, the screen of the connection cable has to be connected to the sensor.	
	Unless stated otherwise, all data refer to the reference target plate to IEC 60947-5-2 over the whole temperature range.	
	(FE360 = ST37-2K) 12x12x1 mm	
Pack quantity	1 pcs.	

Electrical connection - plug

Connector: 1 x M12; coding: A; Contacts: gold-plated

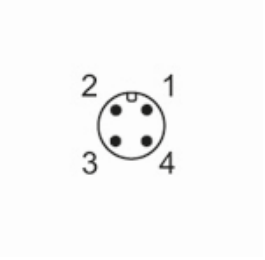

Connection

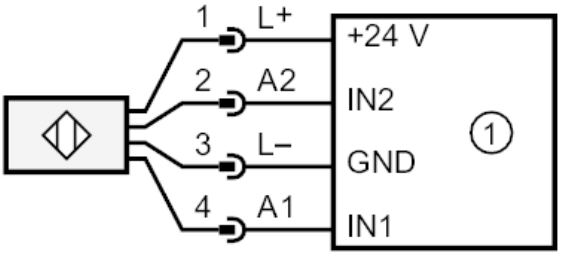

1: safety-related logic unit