XY2C* switch accessory

Turnbuckle **XY2CZ404**

- Image
- Dimensions
- Material

Simply easy!™

Telemecanique Sensors

XY2CZ404 turnbuckle



- Image

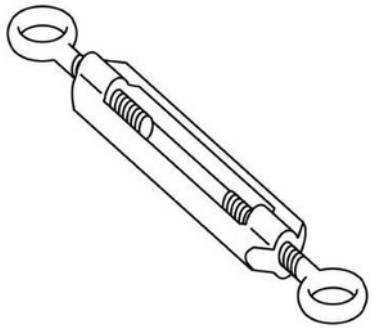

- Dimensions
  - In mm (millimetre)
  - M8 + locknut (not shown in the drawing)

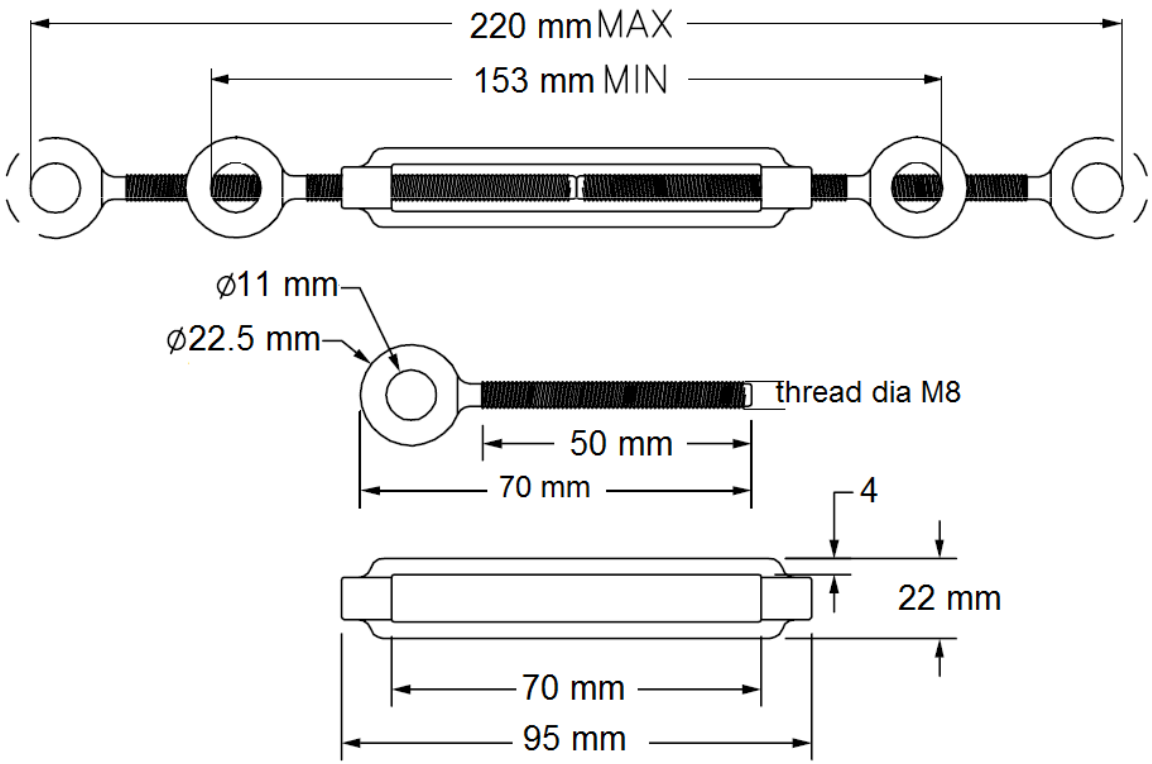

- Materials
  - Basic steel with some surface threatment