O8H272

Diffuse reflection sensor with background suppression

O8H-FPKG/IO-Link/0,30M/AS/4P

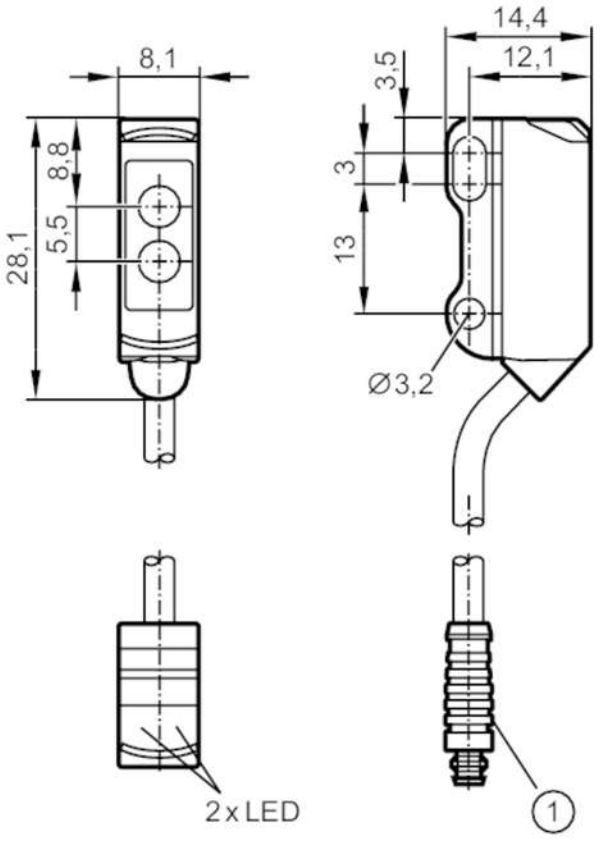

1: illustration (example)
receiver in upper lens
transmitter in lower lens

Product characteristics		
Type of light		red light
Housing		rectangular
Application		
Special feature		Background suppression
Function principle		Diffuse reflection sensor
Electrical data		
Operating voltage	[V]	10...30 DC
Current consumption	[mA]	20; ((24 V))
Protection class		III
Reverse polarity protection		yes
Type of light		red light
Wave length	[nm]	633
Outputs		
Electrical design		PNP
Output function		light-on/dark-on mode; (programmable)

O8H272

Diffuse reflection sensor with background suppression

O8H-FPKG/IO-Link/0,30M/AS/4P

Max. voltage drop switching output DC	[V]	2.5
Permanent current rating of switching output DC	[mA]	100
Switching frequency DC	[Hz]	1000
Short-circuit protection		yes
Type of short-circuit protection		pulsed
Detection zone		
Range	[mm]	1...80; (white paper 200 x 200 mm)
Range on white object (90 % remission)	[mm]	1...80
Range on grey object (18 % remission)	[mm]	3...76
Range on black object (6 % remission)	[mm]	5...74
Setting range	[mm]	10...80
Range adjustable		yes
Max. light spot diameter	[mm]	4
Light spot dimensions refer to		at maximum range
Background suppression available		yes
Interfaces		
Communication interface		IO-Link
Transmission type		COM2 (38,4 kBaud)
IO-Link revision		1.1
SDCI standard		IEC 61131-9
Profiles		Smart Sensor: Device Identification; Device Diagnosis; Teach Channel; Switching Channel; Process Data Variable
SIO mode		yes
Required master port type		A
Min. process cycle time	[ms]	10
IO-Link process data (cyclical)		**function** / **bit length**
		process value / 32
		device status / 4
		binary switching information / 1
IO-Link functions (acyclical)		application specific tag; operating hours counter; switching cycles counter
Supported DeviceIDs		**Type of operation** / **DeviceID**
		default / 1117
Operating conditions		
Ambient temperature	[°C]	-25...60
Protection		IP 65; IP 67
Tests / approvals		
EMC		EN 60947-5-2
MTTF	[years]	756

O8H272

Diffuse reflection sensor with background suppression

O8H-FPKG/IO-Link/0,30M/AS/4P

UL approval		Ta	-25...60 °C
		Enclosure type	Type 1
		power supply	Limited Voltage/Current
		UL Approval no.	E017
		File number UL	E174191

Mechanical data

Weight	[g]	21.3
Housing		rectangular
Dimensions	[mm]	28.1 x 8.1 x 14.4
Materials		housing: ABS; stainless steel (316L/1.4404)
Lens material		PMMA
Lens alignment		side lens

Displays / operating elements

Display	switching status	1 x LED, yellow
	operation	1 x LED, green

Remarks

Pack quantity	1 pcs.

Electrical connection

Cable: 0.3 m, PVC; 3 x 0.08 mm²

Connection

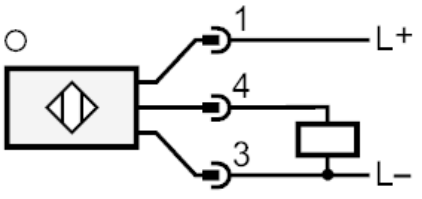

Connector: 1 x M8; coding: A



O8H272

Diffuse reflection sensor with background suppression

O8H-FPKG/IO-Link/0,30M/AS/4P

Diagrams and graphs

accuracy graph

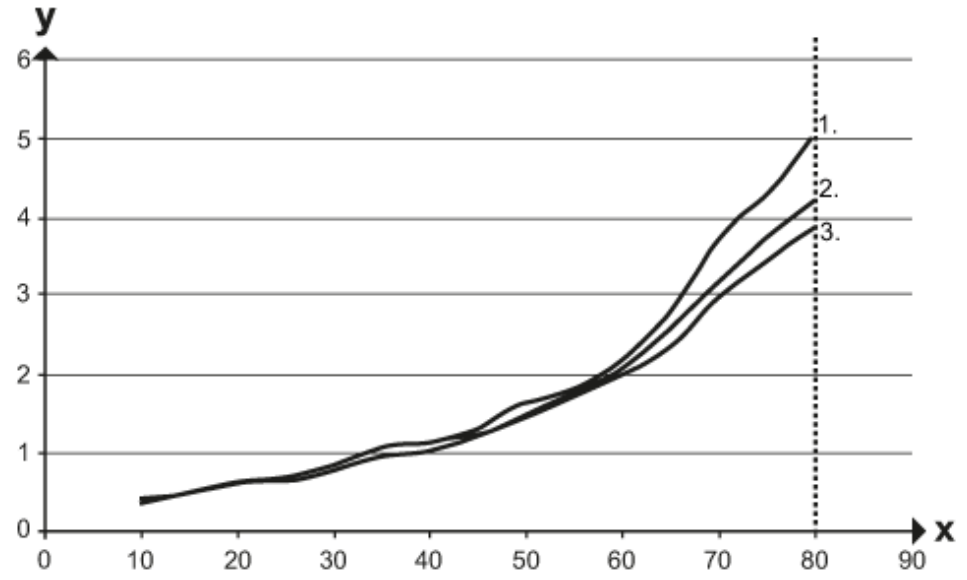

x: distance sensor/object [mm]

y: min. distance object/background [mm]

1 = object black (6 % remission) , background white (90 % remission)

2 = object grey (18 % remission) , background white (90 % remission)

3 = object white (90 % remission) , background white (90 % remission)

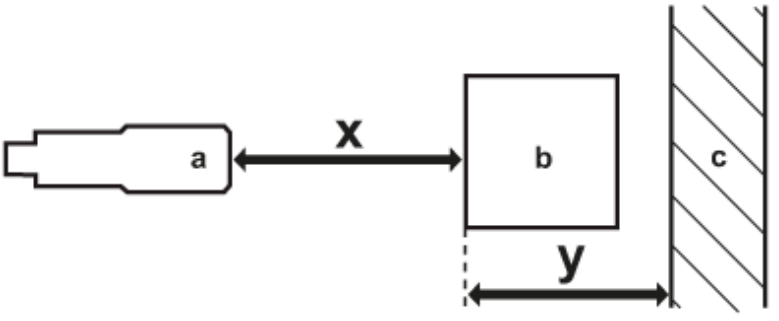

a: sensor

b: object

c: background

x: distance sensor/object [mm]

y: min. distance object/background [mm]