Elite 440

Multi-line three-phase panel meter

Add on modules | High accuracy | Modbus communication

MFM with high accuracy, configurability and easy integration

Elite 440 is a multi-line three-phase digital panel meter for accurate and reliable measurement of electrical parameters (voltage, current, power, frequency, etc.) for industrial and commercial applications. It has a large multi-line backlit LCD display which enables four parameters to be displayed at the same time. Modbus communication capability allows easy integration with energy monitoring systems. Expansion modules can be fitted for enhanced system integration (pulse inputs/outputs or analogue output and ethernet).



Application

- Commercial and industrial sub-metering and Energy Management System (EMS) applications
- Building management and monitoring systems (BMS)
- High, medium and low-voltage switchgear panels
- Control and relay panels
- Power Control Centre (PCC) panels
- Motor Control Centre (MCC) panels
- Relaying and control outputs
- Plant automation and monitoring system (SCADA/DAS)

Benefits

- Easy interface with external devices through built-in Modbus (RS-485/Ethernet)
- Detachable connectors for easy installation
- Diagnostics assistance on display
- Suitable for star or delta connections and for low or high-voltage applications
- Cost-effective online monitoring
- Field-configurable CT/PT primary and secondary values using push-buttons

Feature

- Large four-line seven-digit display (9.7 H x 5 W mm) with quadrant identification section and bar graph for instantaneous power-level indication
- High accuracy: Class 0.2s, 0.5s, 1.0
- Average THD measurement for voltage, current and power, up to 31st harmonic
- Measurement selection (star or delta/3P4W or 3P3W)
- Modbus communication via RS-485 port/ethernet
- True root-mean squared (RMS) metering
- Calibration LED for accuracy test on site
- Wide and configurable current range 1-2A and 5-10A
- Wide-range auxiliary power supply, suitable for high-voltage or low-voltage installations
- Maximum demand recording
- Midnight snapshot (values) for selected energy registers
- Scroll-lock and 'Favourites Page' display support
- Expansion capability via add on modules for analogue outputs or pulse inputs/outputs and ethernet
- Password protection for setup mode
- Ethernet gateway module for easy integration of multiple meters connected over RS485 network

SECURE

Elite 440

Features	Models							
	441	442	443	444	445	446	447	448
P-N voltage	●	●	●	●	●	●	●	●
Average P-N voltage	●	●	●	●	●	●	●	●
P-P voltage	●	●	●	●	●	●	●	●
Average P-P voltage	●	●	●	●	●	●	●	●
Line current (L1, L2, L3 and average)	●	●	●	●	●	●	●	●
Active/reactive current	●	●	●	●	●	●	●	●
Frequency	●	●	●	●	●	●	●	●
Power factor		●	●	●	●	●	●	●
Average power factor		●	●	●	●	●	●	●
Active power		●	●	●	●	●	●	●
Total active power		●	●	●	●	●	●	●
Reactive power			●	●	●	●	●	●
Total reactive power			●	●	●	●	●	●
Apparent power			●	●	●	●	●	●
Total apparent power			●	●	●	●	●	●
Active total import/export energy					●	●	●	●
Reactive import (Q1+Q2)/export (Q3+Q4) energy						●		●
Reactive (Q1,Q2,Q3,Q4) energy					●		●	
Apparent import/export energy					●	●	●	●
Active/apparent forwarded energy	●	●	●	●				
Reactive lag/lead forwarded energy			●	●				
Cumulative MD				●	●	●	●	●
Phase angle			●	●	●	●	●	●
Power on/off hours			●	●	●	●	●	●
Load on/off hours		●	●	●	●	●	●	●
Feeder interruptions count (when aux is also off)			●	●	●	●	●	●
Min/max values							●	●
THD voltage	●	●	●	●	●	●	●	●
THD current	●	●	●	●	●	●	●	●
THD power		●	●	●	●	●	●	●
RPM with freq and VUnb and IUnb		●	●	●	●	●	●	●
Modbus on RS 485	●	●	●	●	●	●	●	●

Note:
Ethernet (add on) module is available for all Elite 440 models as single meter module or gateway
Additional modules (two pulse input & output or four analogue outputs) can be available in Elite 443 to Elite 448
Optional software config view is available for reading and configuration

Connection diagram

LT3Ø4W

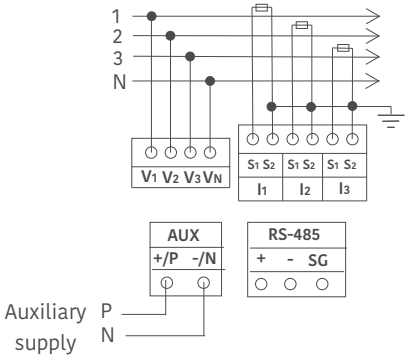

In case of CT/PT operated meter, ensure that meter is connected on secondary side of instrument transformer.

HT3Ø3W

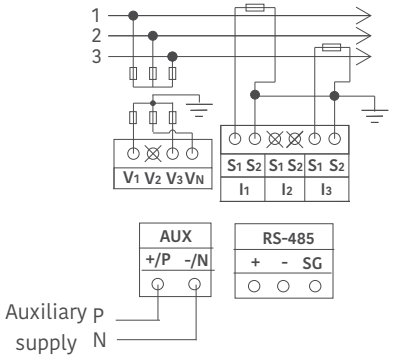

In case of 3Ø3W, VN is replaced by V2 .

HT3Ø4W

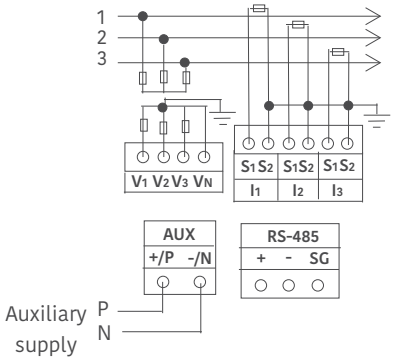

SHORT CTs BEFORE OPENING CURRENT TERMINALS

Mechanical dimensions

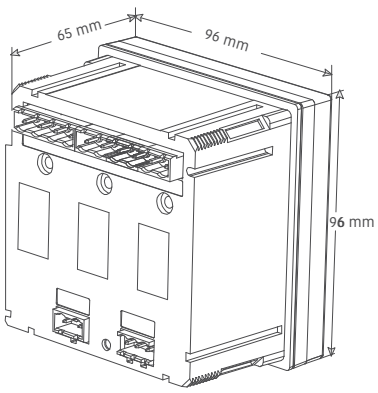

Meter without module

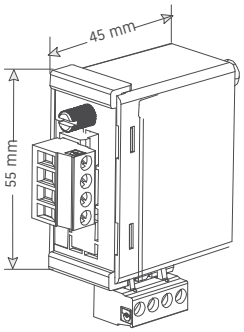

I/O module

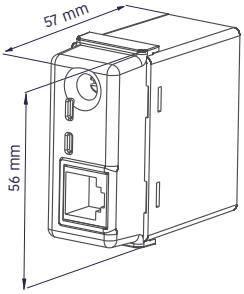

Ethernet module

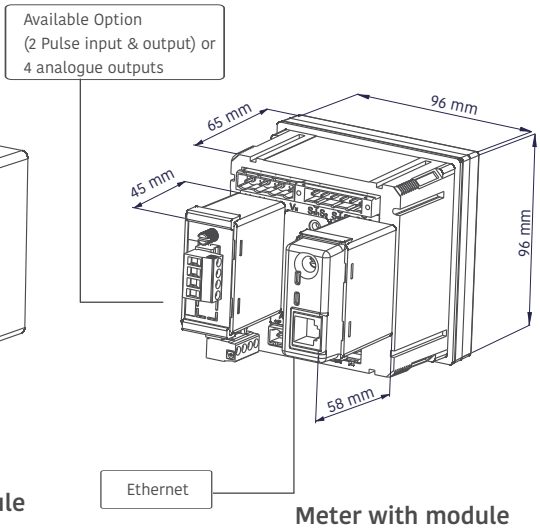

Meter with module

Elite 440

Technical specifications

Electrical	
Connection type	Common product for HT3/HT4/LT4 application
Voltage range:	
Measurement voltage range	57.7 V (100V) - 240 V (415 V) AC 3 phase 4 wire (3 phase 3 wire) Tolerance-30% to +20% of V_n
Aux power supply range	80 - 300 V AC/DC or 24 - 60 V DC (variant)
Current range	Available 1-2A and 5-10 A in single variant (field configurable)
Main frequency	50/60Hz with ±5%
Accuracy Class	0.2s, 0.5s, 1.0
Burden	Aux burden: 3.5 VA; 8VA when all modules connected. Current ckt burden: 1 A - 0.05VA per phase, 5 A - 0.25 VA per phase. Voltage ckt burden: 0.15 VA per phase.
Short time over current	20 x I_{max} for 1 sec., 10 x I_{max} for 3 sec., 7 x I_{max} for 10 sec.
Compliance	
Standards*	IS13779, IS14697, IEC62052-11, IEC62053-21, IEC62053-23, IEC62053-22, IEC61010, IEC62053-31
Mechanical	
Dimensions (WXHXD)	96 x 96 x 65 mm (w/o module); 96 x 96 x 110 mm (with module) Cut out size 92 x 92 mm
Weight	0.5 kg (approx)
Enclosure	FRPC
Terminals	Combicon connector
Max conductor size	2.5 mm^2
Environmental	
Ingress protection	IP 54 (front fascia); IP20 (at terminals)
Insulation	4 kV RMS 50 Hz, 1 minute
Impulse withstand	6 kV
Temperature	-20 °C to +60 °C (operating) -25 °C to +80 °C (storage)
Humidity	95% non-condensing
Features	
Favourite page	On/Off
CT/VT primary	Configurable in field through keypad
Communication	RS485 Modbus half duplex (default) and data will be available in floating point format (IEEE754)
Baud rate	From 1200-38400 bps (Default 9600 bps)
Load survey	40 days for 6 parameters @ 30 minutes integration period Options for 15 or 60-minute integration period.
Modules	
2 Digital pulse input and output (single module)	Input supports voltage range of 8-40VDC with pulse duration of 5 ms for input 1 and 40 ms for input 2. Output are normally open type, voltage rating of 230 V AC @ 100 mA or 48 V DC @ 100 mA with pulse width of 80 ms or 240 ms
Ethernet	10/100base-T for Modbus over TCP/IP communication
4 analogue outputs	Analogue output supports current range of 4-20 mA non-isolated with loop impedance 750 Ω, auxiliary supply 20-40V DC @ 100 mA

Specifications are subject to change without prior notice

Australia
sales_australia@securemeters.com
www.securemeters.com/au

Dubai
sales_middleeast@securemeters.com
www.securemeters.com/me

Europe
sales_europe@securemeters.com
www.securemeters.com/eu

India, SE Asia, Africa
sales_india@securemeters.com
www.securemeters.com/in

UK
sales_uk@securemeters.com
www.securemeters.com/uk