DF3200

Distribution module for supply voltage

Pot.Module LOAD/2x5x 2.5mm2

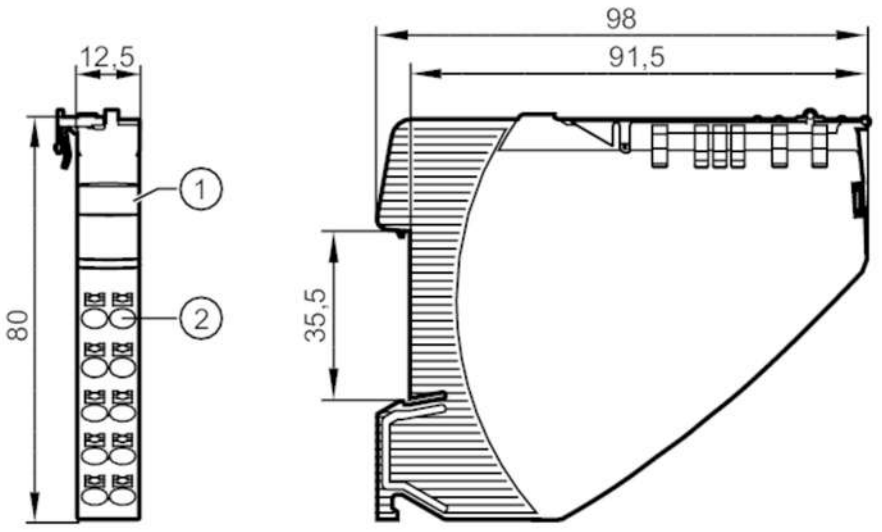

1 panel for labelling
2 push-in terminal 24 V DC

Application			
Design		potential module 2 x 5 x 2,5 mm²	
Electrical data			
Operating voltage	[V]	18...30 DC	
Nominal voltage DC	[V]	24	
Protection class		III	
Max. load current	[A]	20	
Operating conditions			
Ambient temperature	[°C]	-25...60	
Storage temperature	[°C]	-40...70	
Protection		IP 20	
Tests / approvals			
EMC		EN 61000-6-3	radiation of interference
		EN 61000-6-2	immunity
Mechanical data			
Weight	[g]	64.8	
Type of mounting		mounting on DIN rail	
Installation instruction		string mounting possible	
Dimensions	[mm]	80 x 12.5 x 98.5	

DF3200

Distribution module for supply voltage

Pot.Module LOAD/2x5x 2.5mm2

Electrical connection

push-in terminals:

Connection

