MURR ELEKTRONIK
stay connected

T-Coupler Slimline M12 male / 2x M12 female A-cod.

5-pol. / 2x 5-pol., Bridge 2-4

T-coupler (Slim Line)
Male straight – females straight
M12 – M12, 5-pole
Distribution function (NO)
Plastic housings with good resistance against chemicals and oils.
The resistance to aggressive media should be individually tested for your application. Further details on request.

Link to Product

Illustration



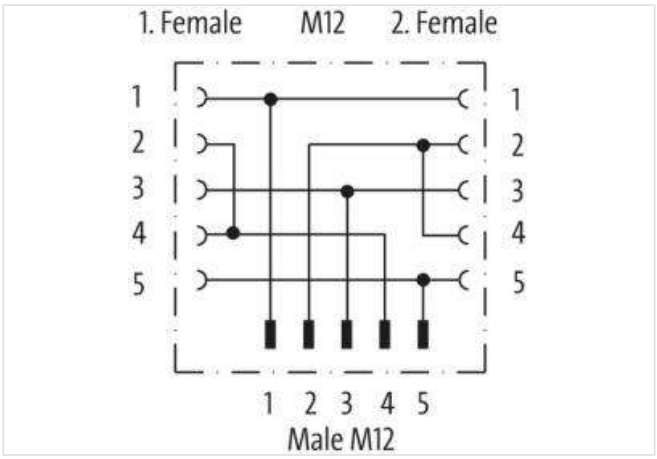

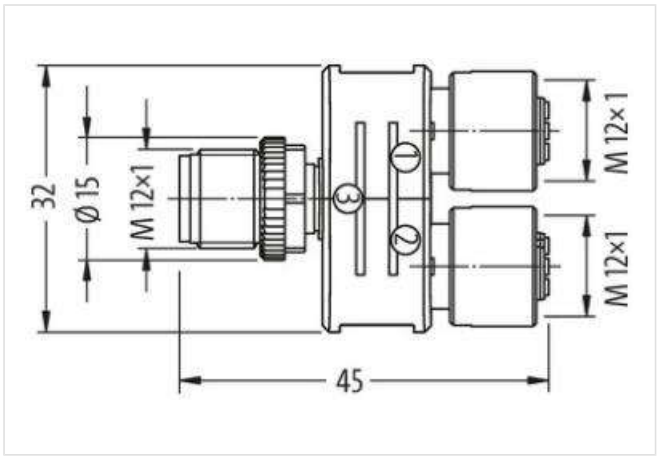

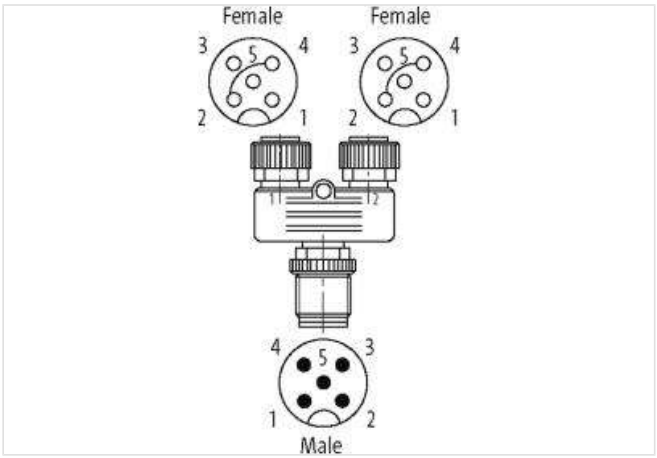

Product may differ from Image

Side 1

Degree of protection (EN IEC 60529)	IP67

Side 2

Degree of protection (EN IEC 60529)	IP67

Commercial data

The information in this Product-PDF has been compiled with the utmost care.
Liability for the correctness completeness and topicality of the information is restricted to gross negligence. Version: 2024-01-31

ECLASS-6.0	27143423
ECLASS-6.1	27279221
ECLASS-7.0	27440104
ECLASS-8.0	27440104
ECLASS-9.0	27440106
ECLASS-10.1	27440106
ECLASS-11.1	27440106
ECLASS-12.0	27440106
ETIM-5.0	EC002062
customs tariff number	85366990
GTIN	4048879144797
Packaging unit	1
Electrical data | Supply	
Operating voltage AC max.	60 V
Operating voltage DC max.	60 V
Operating voltage AC (UL-listed)	30 V
Operating voltage DC (UL-listed)	30 V
Current operating per contact max.	4 A
Installation | Connection	
Tightening torque	0,6 Nm
Mounting set	M12 x 1
Device protection | Electrical	
Additional condition protection degree	inserted, screwed
Pollution Degree	3
Rated surge voltage	1,5 kV
Material group (IEC 60664-1)	I
Mechanical data | Mounting data	
Mounting method	inserted, screwed, Shaking protection
Environmental characteristics | Climatic	
Operating temperature min.	-25 °C
Operating temperature max.	85 °C

The information in this Product-PDF has been compiled with the utmost care.
Liability for the correctness completeness and topicality of the information is restricted to gross negligence. Version: 2024-01-31