Series QR2-S-RPN standard

- Straight fitting
- External thread
- M5 M7 G 1/8 G 1/4 G 3/8 G 1/2
- push-in fitting
- Ø 4 Ø 5 Ø 6 Ø 8 Ø 10 Ø 12 Ø 14 Ø16
- QR2-S-RPN



Working pressure min./max.	-0,95 ... 16 bar
Ambient temperature min./max.	-20 ... 80 °C
Weight per piece	See table below

Technical data

Part No.	Port G	Port D	Delivery unit	Weight per piece	Fig.
1823373038	M5	Ø 4	25 piece	0,006 kg	Fig. 2
1823373039	M5	Ø 5	10 piece	0,007 kg	Fig. 2
1823373040	M5	Ø 6	25 piece	0,01 kg	Fig. 2
1823373100	M7	Ø 4	25 piece	0,007 kg	Fig. 1
1823373088	M7	Ø 6	25 piece	0,005 kg	Fig. 2
1823373041	G 1/8	Ø 4	25 piece	0,005 kg	Fig. 1
1823373042	G 1/8	Ø 5	10 piece	0,01 kg	Fig. 1
1823373043	G 1/8	Ø 6	25 piece	0,011 kg	Fig. 1
1823373044	G 1/8	Ø 8	25 piece	0,012 kg	Fig. 1
1823373045	G 1/4	Ø 4	25 piece	0,012 kg	Fig. 1
1823373046	G 1/4	Ø 5	10 piece	0,013 kg	Fig. 1
1823373047	G 1/4	Ø 6	25 piece	0,015 kg	Fig. 1
1823373048	G 1/4	Ø 8	10 piece	0,016 kg	Fig. 1
1823373049	G 1/4	Ø 10	10 piece	0,026 kg	Fig. 1
1823391809	G 1/4	Ø 12	10 piece	0,031 kg	Fig. 1
R412004708	G 1/4	Ø 12	10 piece	0,022 kg	Fig. 2
1823373050	G 3/8	Ø 8	10 piece	0,021 kg	Fig. 1
1823373051	G 3/8	Ø 10	10 piece	0,028 kg	Fig. 1
1823373052	G 3/8	Ø 12	5 piece	0,038 kg	Fig. 1
1823373053	G 3/8	Ø 14	5 piece	0,059 kg	Fig. 1
1823373054	G 1/2	Ø 12	5 piece	0,048 kg	Fig. 1
1823373055	G 1/2	Ø 14	5 piece	0,064 kg	Fig. 1
R412007955	G 1/2	Ø16	1 piece	0,072 kg	Fig. 1

Technical information

The series QR1 (plastic) and QR2 (metal) can not be combined
Thread seal with captive O-ring

For further information about assembling and tolerances of adaptable tubing can be found in the “Technical information” document (available in the MediaCentre).

Technical information

Material	
Housing	Brass, nickel-plated
Seal	Acrylonitrile butadiene rubber
Tooth lock washer	Stainless steel
Release ring	Brass, nickel-plated
Thread	Brass, nickel-plated

Dimensions

Fig. 1

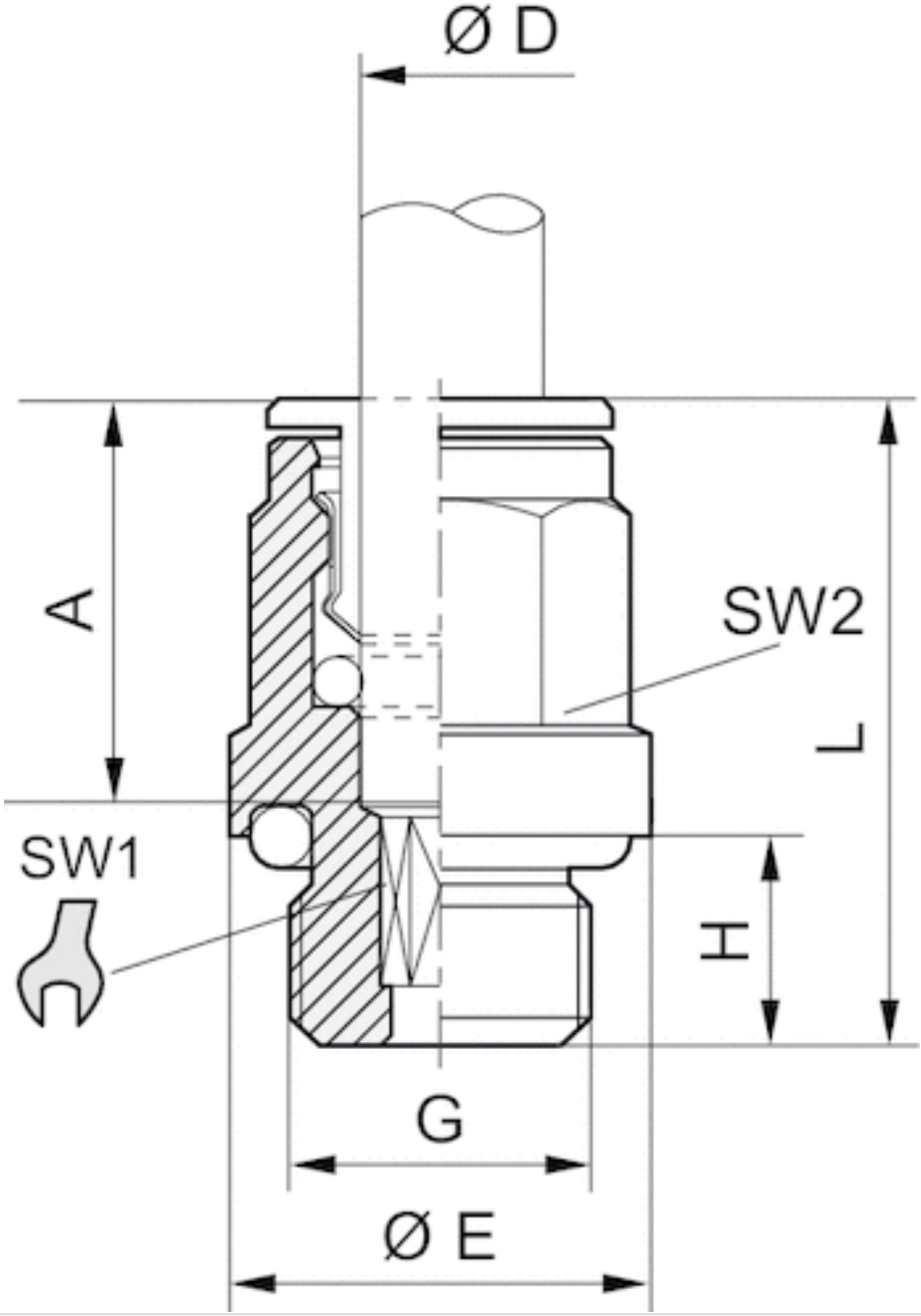

Fig. 2

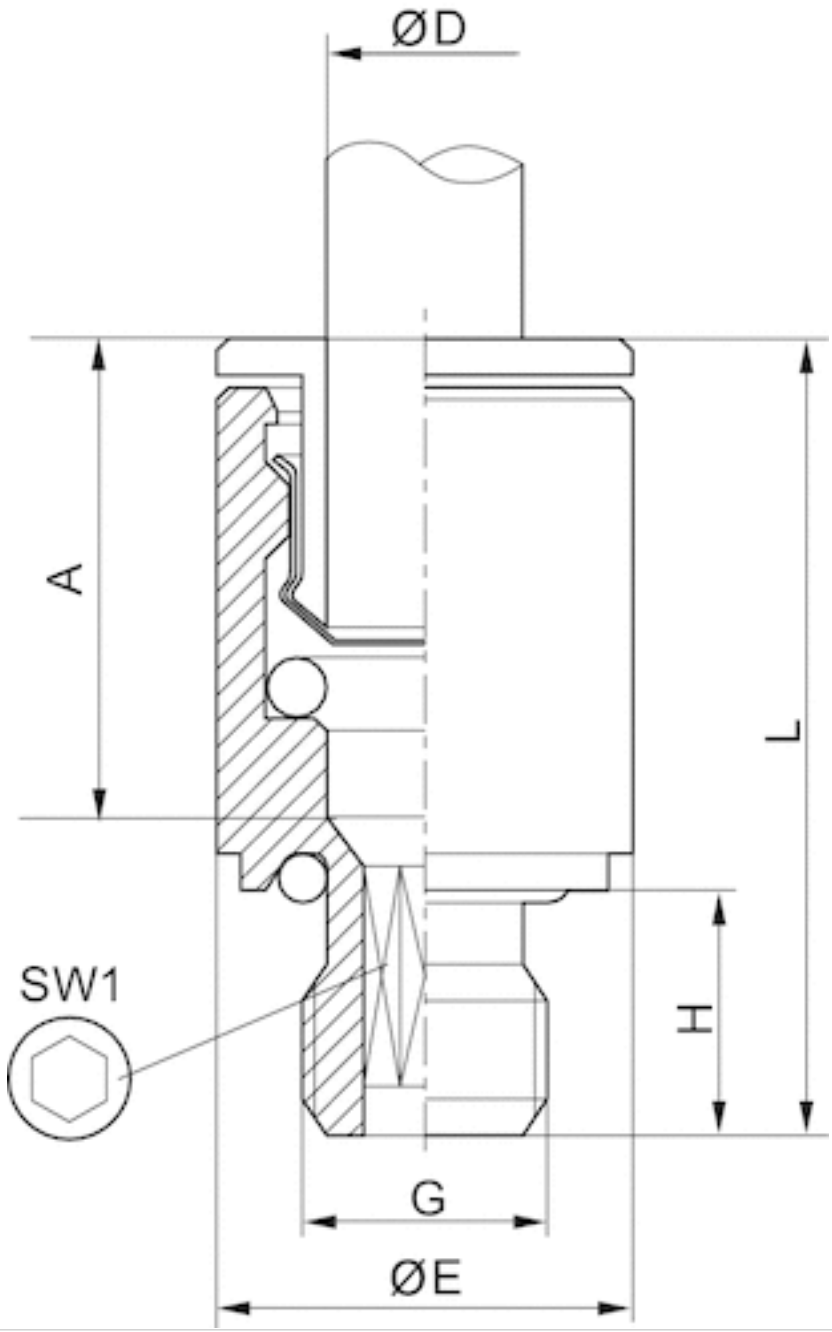

Dimensions

Part No.	Port D	Port G	Ø E	H	L	A Insertion depth	SW 1	SW 2	Fig.
1823373038	Ø 4	M5	9	4	20.5	15	2.5	–	Fig. 2
1823373039	Ø 5	M5	9.5	4	22	16	2.5	–	Fig. 2
1823373040	Ø 6	M5	10.5	4	22	16	2.5	–	Fig. 2
1823373100	Ø 4	M7	10.8	6	22	15	2.5	9	Fig. 1
1823373088	Ø 6	M7	10.5	6	24	16	3.5	–	Fig. 2
1823373041	Ø 4	G 1/8	13.5	6	20	15	2.5	9	Fig. 1
1823373042	Ø 5	G 1/8	13.5	6	22	16	4	10	Fig. 1
1823373043	Ø 6	G 1/8	13.5	6	24	16	4	11	Fig. 1
1823373044	Ø 8	G 1/8	13	6	26.5	18	5	13	Fig. 1
1823373045	Ø 4	G 1/4	17	8	21	15	2.5	9	Fig. 1

Part No.	Port D	Port G	Ø E	H	L	A Insertion depth	SW 1	SW 2	Fig.
1823373046	Ø 5	G 1/4	17	8	22	16	4	10	Fig. 1
1823373047	Ø 6	G 1/4	17	6.5	22.5	16	4	11	Fig. 1
1823373048	Ø 8	G 1/4	17	8	25	18	6	13	Fig. 1
1823373049	Ø 10	G 1/4	16	8	29.5	19	7	16	Fig. 1
1823391809	Ø 12	G 1/4	16	6.5	30	20	7	18	Fig. 1
R412004708	Ø 12	G 1/4	17	8.3	31	7	–	-	Fig. 2
1823373050	Ø 8	G 3/8	20	9	25	18	6	13	Fig. 1
1823373051	Ø 10	G 3/8	21	9	29.5	19	8	16	Fig. 1
1823373052	Ø 12	G 3/8	21	9	31	20	10	18	Fig. 1
1823373053	Ø 14	G 3/8	21	9	34	22	10	21	Fig. 1
1823373054	Ø 12	G 1/2	24	11	31	20	10	18	Fig. 1
1823373055	Ø 14	G 1/2	24	11	34	22	12	21	Fig. 1
R412007955	Ø16	G 1/2	24	11	37	12	24	-	Fig. 1

Efficient pneumatic solutions, our program: cylinders and drives, valves and valve systems, air supply management



Visit us: Emerson.com/Aventics

Your local contact: Emerson.com/contactus

Emerson.com

Facebook.com/EmersonAutomationSolutions

LinkedIn.com/company/Emerson-Automation-Solutions

Twitter.com/EMR_Automation

An example configuration is depicted on the title page. The delivered product may thus vary from that in the illustration. Subject to change. This Document, as well as the data, specifications and other information set forth in it, are the exclusive property of AVENTICS GmbH. It may not be reproduced or given to third parties without its consent. Only use the AVENTICS products shown in industrial applications. Read the product documentation completely and carefully before using the product. Observe the applicable regulations and laws of the respective country. When integrating the product into applications, note the system manufacturer's specifications for safe use of the product. The data specified only serve to describe the product. No statements concerning a certain condition or suitability for a certain application can be derived from our information. The information given does not release the user from the obligation of own judgement and verification. It must be remembered that the products are subject to a natural process of wear and aging.

The Emerson logo is a trademark and service mark of Emerson Electric Co. Brand logotype are registered trademarks of one of the Emerson family of companies. All other marks are the property of their respective owners. © 2021 Emerson Electric Co. All rights reserved.

2021-04

EMERSON

CONSIDER IT SOLVED™