

Indicator light,conical,green

Part no.	**M22-LH-G**
Article no.	**216780**
Catalog No.	**M22-LH-GQ**

Powering Business Worldwide

Delivery programme

Product range			RMQ-Titan (drilling dimensions 22.5 mm)
Basic function			Indicator lights
Single unit/Complete unit			Single unit
Colour			
			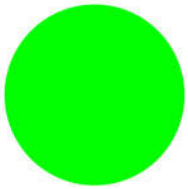
			Green
Design			Extended, conical
Protection type			IP67, IP69K
Front ring			Front ring: titanium
Connection to SmartWire-DT			yes

Approvals

Product Standards	IEC/EN 60947-5; UL 508; CSA-C22.2 No. 14-05; CSA-C22.2 No. 94-91; CE marking
UL File No.	E29184
UL Category Control No.	NKCR
CSA File No.	012528
CSA Class No.	3211-03
North America Certification	UL listed, CSA certified
Degree of Protection	UL/CSA Type 3R, 4X, 12, 13

General

Standards			IEC/EN 60947 VDE 0660
Protection type			IP67, IP69K
Climatic proofing			Damp heat, constant, to IEC 60068-2-78 Damp heat, cyclic, to IEC 60068-2-30
Ambient temperature		°C	
Open		°C	- 25 - + 70
Mounting position			As required
Mechanical shock resistance		g	30 Shock duration 11 ms Sinusoidal according to IEC 60068-2-27
Terminal capacity			
Solid		mm^2	0.5 - 1.5
Stranded		mm^2	0.5 - 1.5

Contacts

Rated impulse withstand voltage	U_{imp}	V AC	4000
Rated insulation voltage	U_i	V	250
Overvoltage category/pollution degree			III/3

Technical data ETIM 5.0

Low-voltage industrial components (EG000017) / Front element for indicator light (EC000223)
Electric engineering, automation, process control engineering / Low-voltage switch technology / Command and alarm device / Front element for warning lights (ecl@ss8-27-37-12-11 [AKF029010])

Suitable for number of built-in signal lights			1
Colour lens			Green
Construction type lens			Round
Hole diameter		mm	22

Width opening		mm	22
Height meter opening		mm	6
With front ring			Yes
Material front ring			Plastic
Colour front ring			Chrome
Type of lens			High
Degree of protection (IP), front side			IP67

Dimensions

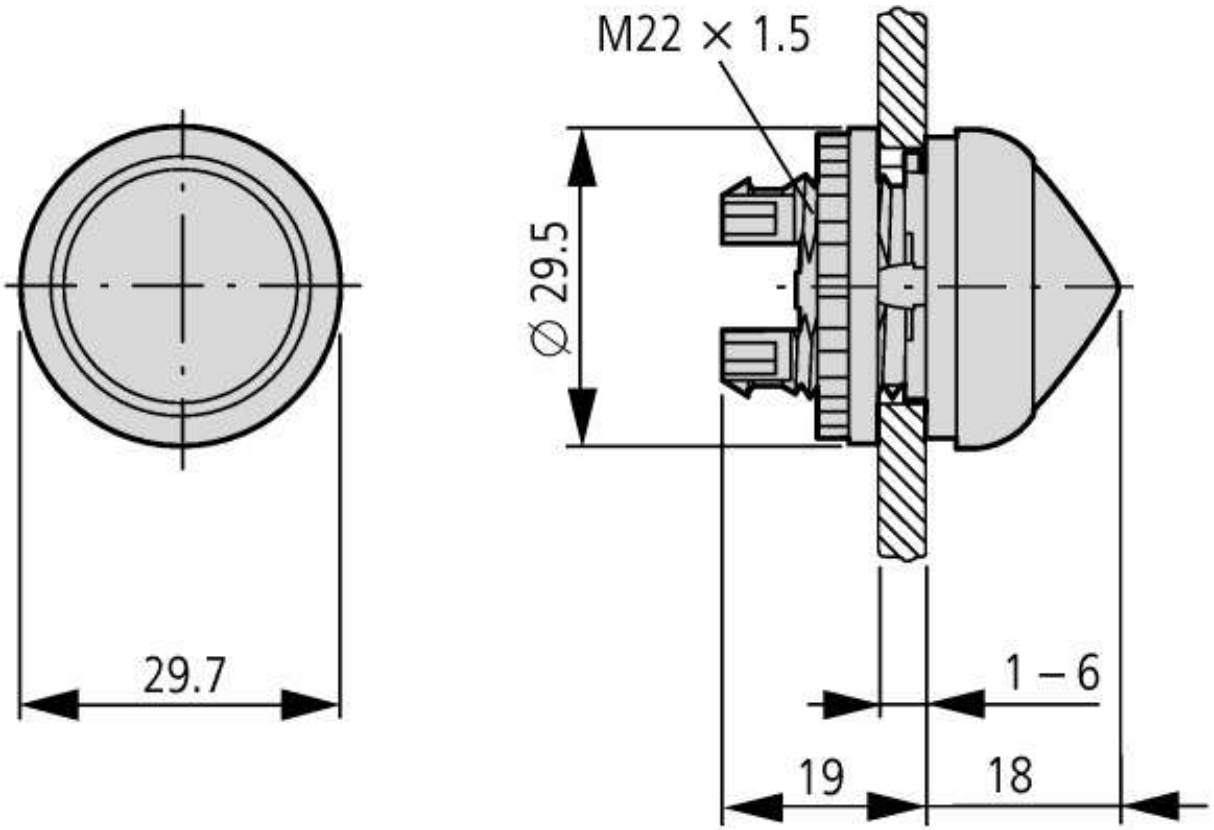

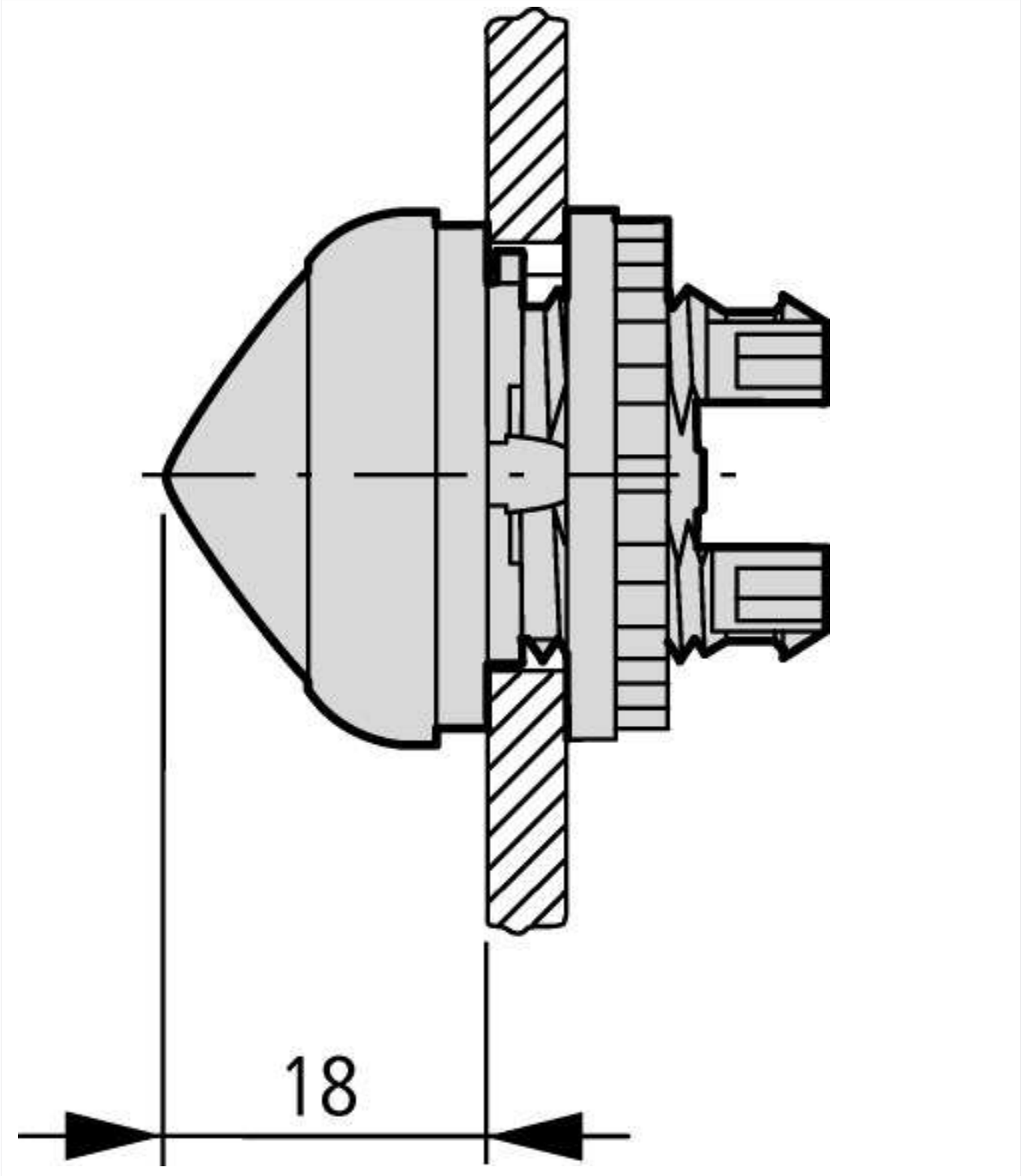
18

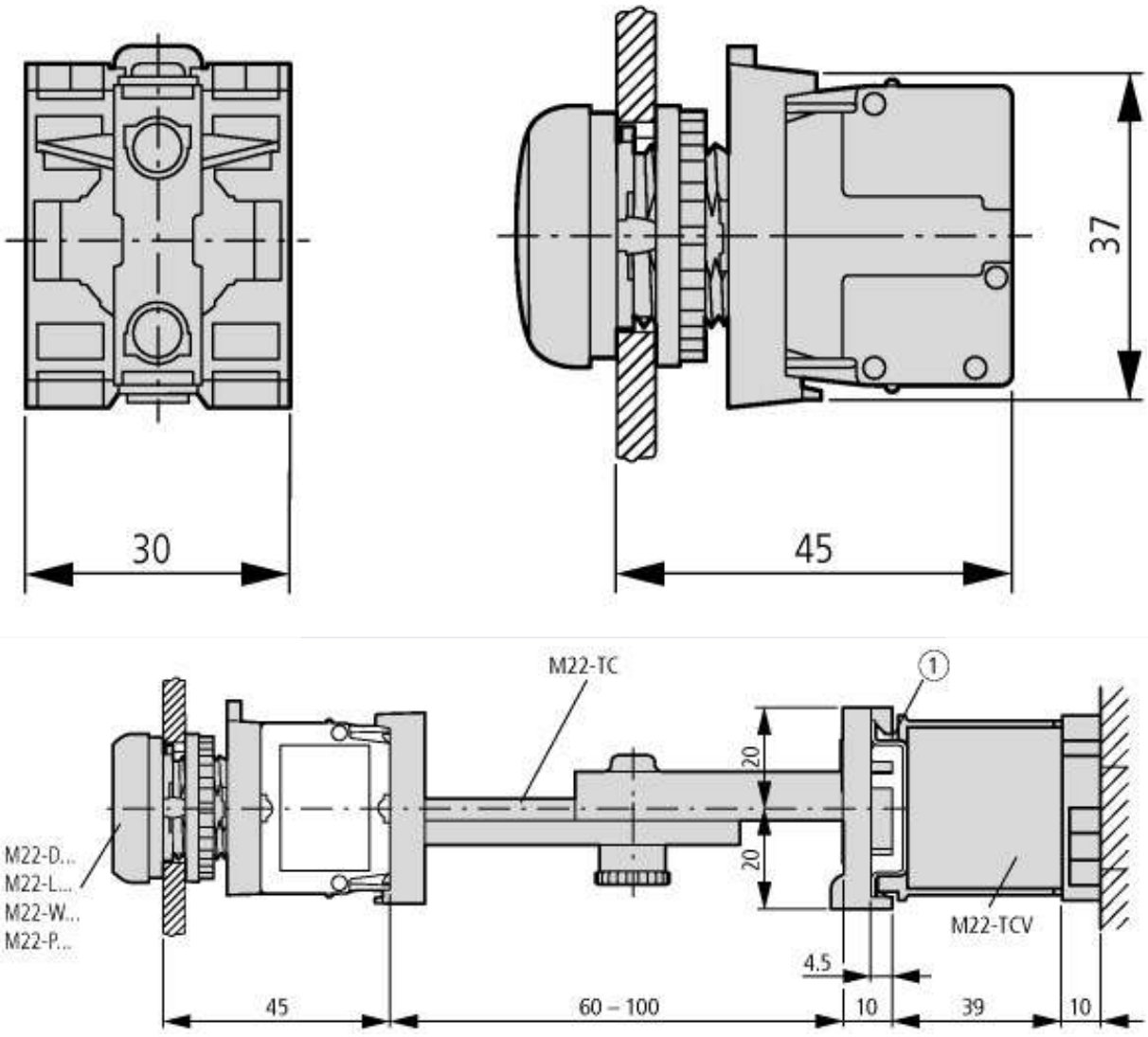

Pushbuttons and indicator lights with M22-TC telescopic clip and M22-TCV extension

① Top-hat rail to IEC/EN 60715

Additional product information (links)

IL04716002Z (AWA1160-1745) RMQ-Titan System	
IL04716002Z (AWA1160-1745) RMQ-Titan System	ftp://ftp.moeller.net/DOCUMENTATION/AWA_INSTRUCTIONS/IL04716002Z2013_08.pdf

© 11/2013 by Eaton Industries GmbH