E20923

Mounting set for reflectors

SYSTEM COMPONENT REFL BOLT

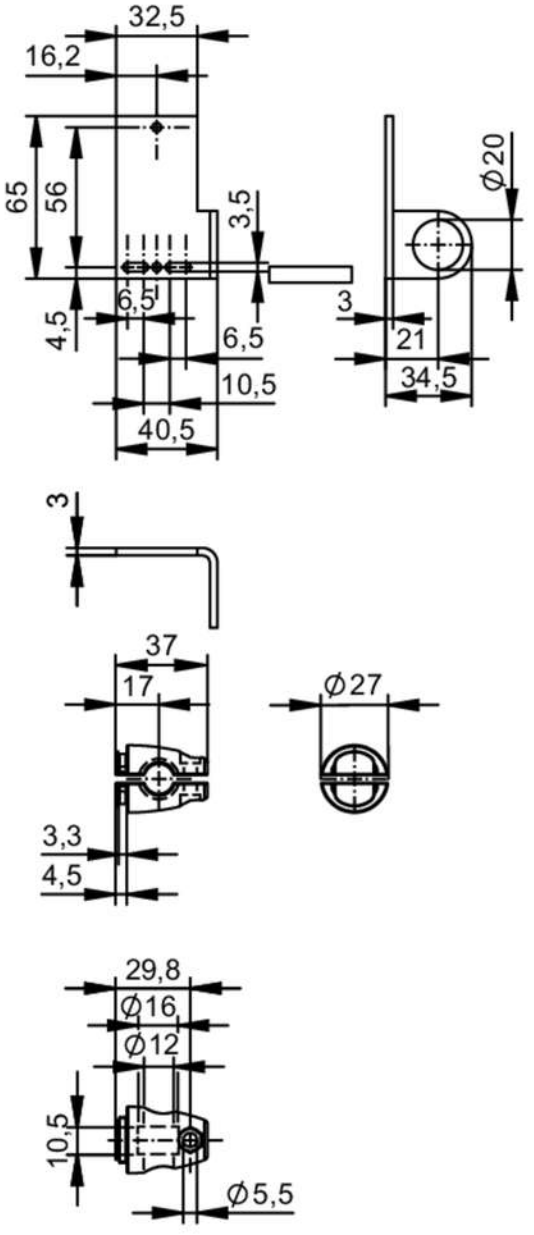

Application		
Design		clamp mounting, for reflector, 66 x 31 mm / 57,6 x 32,5 mm
Mechanical data		
Weight	[g]	223.5
Type of mounting		free-standing; (M10)
Materials		fixture: stainless steel (1.4571/316Ti); Clamp: stainless steel (1.4408)
Accessories		
Items supplied		head cap screw: 1 x M10 x 55
Remarks		
Pack quantity		1 pcs.

E20923

Mounting set for reflectors

SYSTEM COMPONENT REFL BOLT

Diagrams and graphs

Installation

