180 Rotating Wall Unit

A unique wall unit that rotates 180 degrees to cordon off any area at a variety of angles.

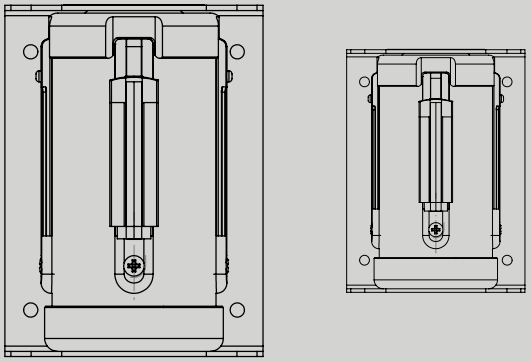

Features & Benefits

- Incorporating all the benefits of a standard Tensabarrier® wall unit with the added benefit of a rotating cassette holder.
- Saves on multiple units as only one unit is needed to cordon off areas at different angles within 180 degrees of the fixing.
- The casing incorporates pivots, as the webbing is pulled out the unit dynamically changes to the required direction within the 180 degree angle.
- Areas can be cordoned off without taking up valuable floor space.
- Quick and simple to install.

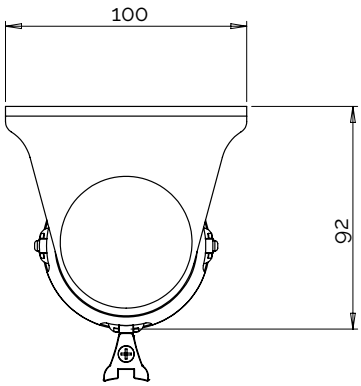

Product Specification

- 180 degree rotating unit.
- Available as standard with a powder coated black casing and yellow rotating head unit.
- Standard Tensator® anti-tamper tape-end provided.
- Provided with an 898 wall receiver, which is screw mounted to the opposite wall or surface – additional clips are available to purchase.
- Comes as standard with webbing connectivity – so other Tensabarrier® products can be connected to the side of the rotating head unit if required.

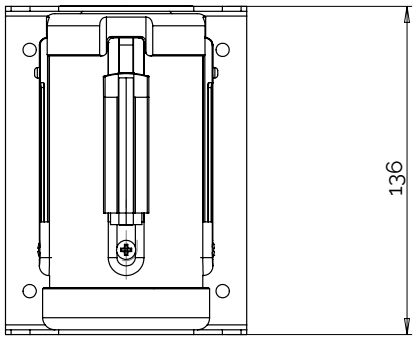

Product Configuration

- Available with 2.3m or 3.65m of coloured, chevron or standard safety message webbing.
- Custom printed webbing options available.
- Optional tape ends available – magnetic, wire clip, panic break.
- Compatible with Tensator's glass and magnetic mounting options – making installation on any surface possible.



MILTON KEYNES
+44 1908 684 600

NEW YORK
+1 631 666 0336

DUBAI
+971 4 2997 228

PARIS
+33 1 43 09 85 00

FRANKFURT
+49 69 3003 89 010

WROCLAW
+48 71 359 3800

WWW.TENSATOR.COM

Owing to the dynamic nature of our business, specifications are constantly being changed and therefore this literature is for informational purposes only. For the most up to date information, please visit our website www.tensatorgroup.com. Tensator makes no warranties, express or implied, in this document. E&OE.