E40505

Process adapters pipe fitting DIN11851

ADAPT DIN11851 DN80

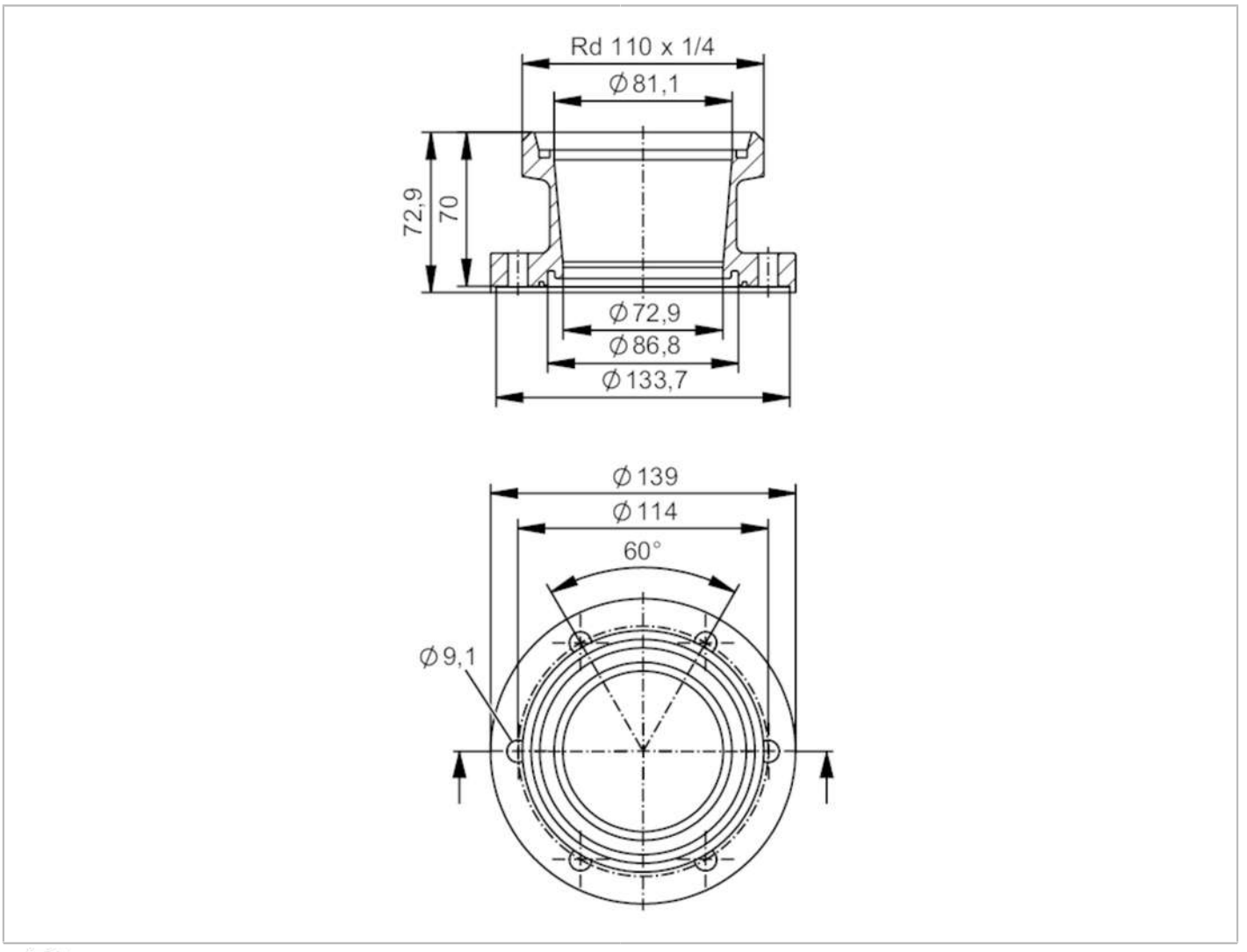

EC 1935/2004 FCM

Application			
Design		for volumetric flow meters SMF	
Application		food and beverage industry; hygienic systems	
Pressure rating		25 bar	2.5 MPa
Tests / approvals			
Pressure Equipment Directive		A possible classification to PED depends on the application and has to be carried out by the user / operator.	
Safety instructions		The compatibility between medium and product material has to be checked in all applications.	
Mechanical data			
Weight	[g]	4988.8	
Materials		stainless steel (316L/1.4404)	
Nominal diameter		DN80 (3“)	
Sensor connection		ifm-specific device flange	
Process connection		hygienic pipe fitting DIN 11851	

E40505

Process adapters pipe fitting DIN11851

ADAPT DIN11851 DN80

Process connection suitable for pipe standard	(DIN EN 10357 series A); (DIN 11866 series A); (DIN 11850 series 2)
Surface characteristics Ra/Rz of the wetted parts	Ra ≤ 0.4 µm
Accessories	
Items supplied	screws 12
Remarks	
Pack quantity	2 pcs.