ABB MEASUREMENT & ANALYTICS | DATA SHEET | DS/CM50-EN REV. T

ControlMaster CM50

Universal process controller, ½ DIN



Measurement made easy
Making process control easy

Comprehensive display of process status
- Crystal-clear, full-color TFT display
- User cutomizable
- Historical trending

Exceptionally easy to use
- Intuitive user interface and clear text prompts make installation, commissioning and operation quick and simple

PC Configuration
- Time saving off-line software tool including report generation

Profile control
- Comprehensive setpoint profiling capablities

Powerful control functionality
- Cascade, feed-forward, ratio, predictive and adaptive control strategies
- Dual-loop capability

Problem-solving capability
- Flexible functionality including math and logic providing power to solve application requirements

Built to survive
- IP 66 and NEMA 4X environmental protection

Overview

The ControlMaster CM50 is a highly versatile, ½ DIN, universal PID process controller. Detailed process information is presented clearly on the CM50's full-color TFT display and an intuitive operator interface simplifies configuration and operation.

Highly scalable in both hardware and software functionality, a CM50 can be specified easily to meet the needs of virtually any process control application – simple or advanced. Powerful control functions such as adaptive control, math, logic and totalization provide problem-solving flexibility and make the CM50 suitable for a wide range of process applications.

Fully configurable via the easy-to-navigate front panel menus or PC configuration software, the CM50 can be commissioned rapidly and then tuned via the advanced autotune capability.

MODBUS and Ethernet communication options ensure easy integration into a control system.

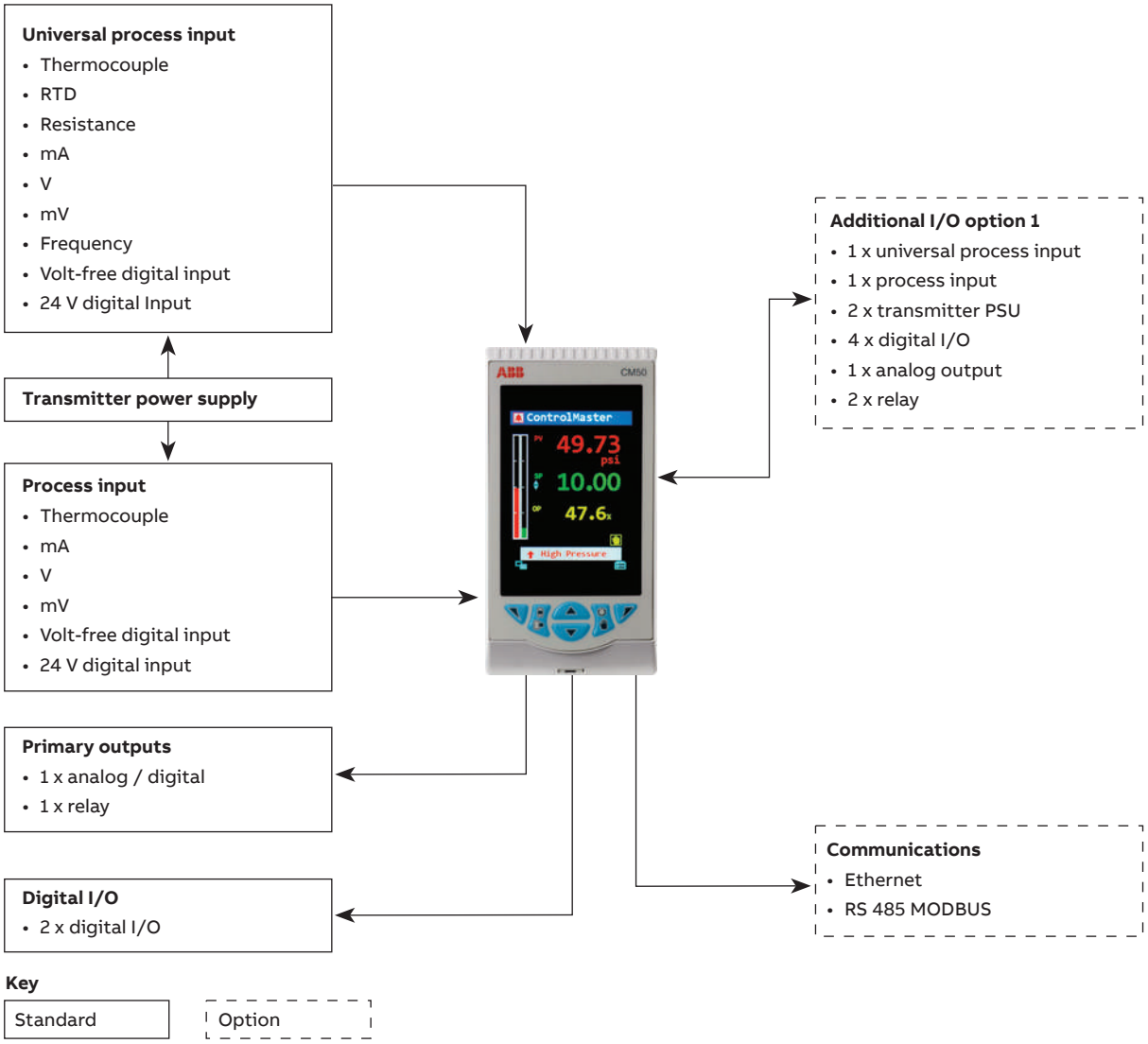

Scalable functionality

The CM50 is highly scalable in terms of both hardware and software to fulfill the demands of the simplest to the most complex process. The basic CM50 meets the needs of a simple control loop. Templates and control functionality can be increased by adding function keys to the basic model. Each function key added provides additional templates and functionality as shown in Figure 1, while retaining previous templates and functionality. For I/O builds, see 'Ordering information' on page 21.

Level	Function keys	Template	Functionality
Base	0 	Single loop Single loop with remote setpoint	Process alarms Basic setpoint switching Basic control • Analog PID • On / Off or time proportioning • Auto tune • Split output control
Standard	1 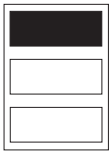	Auto / Manual station low signal selection Auto / Manual station digital signal selection Analog backup station low signal selection Analog backup station digital signal selection Single indicator / manual loader Dual indicator / manual loader	Standard setpoint switching Standard control • Gain scheduling • Motorized valve control Output tracking Logic Math Custom linearizers Delay timers Real time alarms Standard profile Bank control Template customization
Extended	2 	Single loop with feedforward Single loop with feedforward and remote setpoint * Cascade Cascade with remote setpoint * Cascade with feedforward Ratio controller (internal ratio) Ratio controller (external ratio) * Ratio station (internal ratio) Ratio station (external ratio) *	Totalization Advanced profile Advanced control • Feed forward • Predictive control • Adaptive control Historical trending Display customization
Dual loop	3 	Dual loop – local / local Dual loop – remote / local * Dual loop – remote / remote *	

* Option board 1 recommended to suit I/O requirement of template

Figure 1 Overview of template options

Powerful operator display

The CM50 features a full-color 9 cm (3.5 in.) display for displaying detailed process information to the user. Process details such as alarm messages and diagnostic information are displayed clearly in full text without the need for difficult-to-read scrolling displays.

Example of an operator page

Automatic selection of standard display templates immediately makes best use of the CM50's display. Extensive customization features then enable the displayed information to be tailored to suit the process requirements.



Figure 2 Dual loop template display

Diagnostics and alarm status display

The diagnostics and alarm status display provides detailed information on any active alarm or diagnostic condition. The operator can see, at-a-glance, the status of any alarm condition present within the process. Additionally, diagnostic messages are presented clearly to the operator, enabling rapid notification and simple diagnosis of any critical instrument status condition.

Historical information of diagnostic messages can also be viewed in the controller's diagnostic log.



Figure 3 Alarm status display

Trend display

Any 2 analog values within the CM50 can be plotted on the trend display to give a short-term process history. This feature enables control efficiency to be monitored against setpoint and assists in tuning during commissioning.



Figure 4 Trend display

Exceptionally easy to use

The CM50's full text display and simple-to-navigate, pop-up menus makes operation exceptionally easy.

A programmable soft key enables commonly used functions, such as alarm acknowledgement and display selection, to be accessed easily by the operator.



Figure 5 Pop-up menu

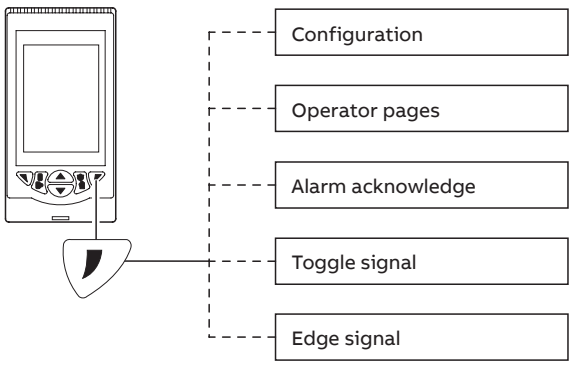

Figure 6 Programmable soft key

Advanced control functionality

The CM50 features many advanced control functions providing the power to bring even the most complex process under control.

Autotune

Once initial configuration is complete, a powerful autotune facility enables automatic calculation of the PID values required, enabling rapid commissioning of the CM50.

Gain scheduling

The CM50's gain scheduling functionality is used for efficient control of non-linear processes. Up to 3 different sets of PID parameters are selected automatically from a reference signal ensuring optimum control response, regardless of the process status.

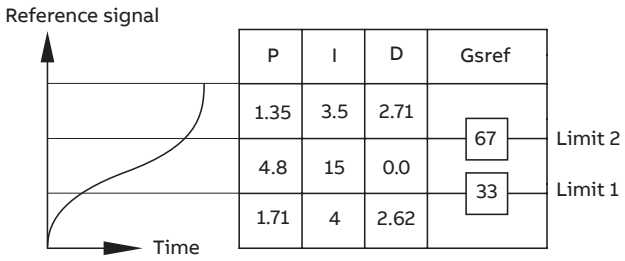

Figure 7 Gain scheduling example

Predictive control (dead-time compensation)

Control of processes with long dead-times, such as pH dosing in a pipeline, is addressed easily using pPI control. Configured via only 3 parameters (gain, integral time and dead-time), pPI control can also be combined with gain scheduling for optimum control efficiency.

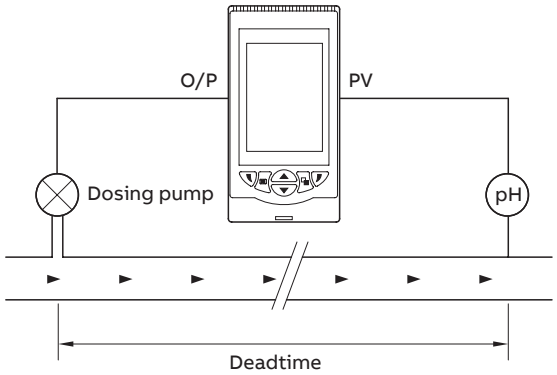

Figure 8 Predictive control example

Adaptive control

Adaptive control enables the CM50 to adjust its control response automatically to suit changing process dynamics. This makes the CM50 particularly useful for processes with varying or uncontrolled types of load, by providing continuous tuning to maximize control efficiency. Fig. 9 shows a product used in a manufacturing process that is stored in an outside tank. The use of adaptive control within the manufacturing process compensates automatically for the change in product temperature caused by seasonal variation.

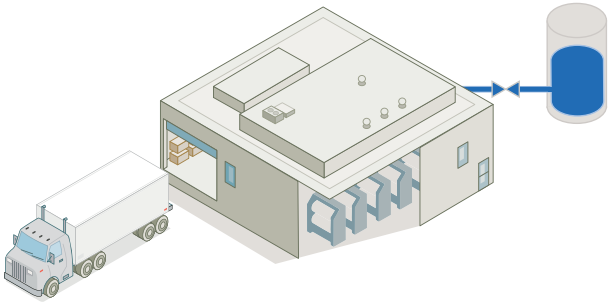

Figure 9 Adaptive control example

Split output control

The CM50 can also be configured to perform split output control, for example, when both heating and cooling of a single process is required.

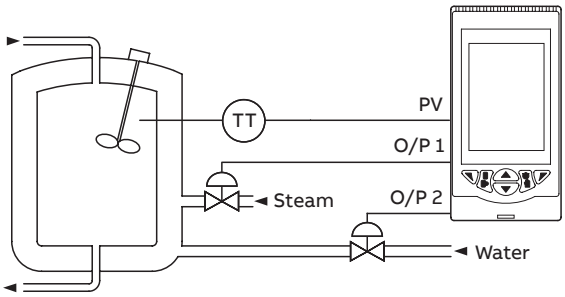

Figure 10 Split output control example

Remote auto / manual switching

In addition to switching via the front panel, the CM50 can be switched between automatic and manual control mode using an external signal. When switched to manual mode via a digital signal, the value of the control output can be preset, for example, to fully open a control valve automatically during a cleaning cycle.

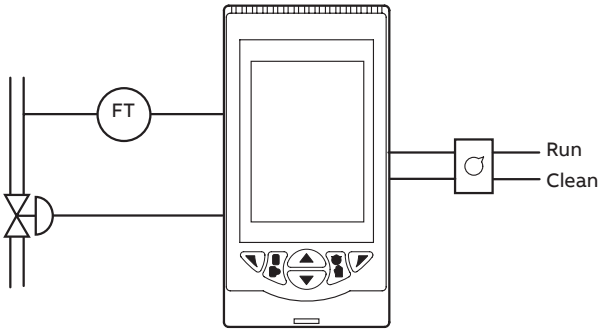

Figure 11 Remote auto / manual switching

External setpoint selection

The CM50's control setpoint can be selected via external digital signals, for example, simplifying operation by selecting different setpoints using external push buttons.

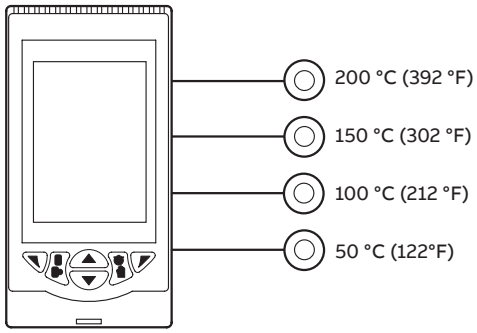

Figure 12 External setpoint selection

Bank control

Bank control enables improved control of multi-element output devices such as banks of heaters, pumps and fans. Aimed at minimizing wear caused by over-use of one specific 'duty' device, bank control enables wear to be levelled by sharing duty and assist handling between every device in the bank.

Bank control gives users the choice of either 'Rotate' or 'First In, First Out (FIFO)' wear-levelling schedules. If required, bank control can be combined with PID control, assigning the PID output signal to the bank control function.

Bank control can also be utilized when split output control is configured. For example, when two variable speed pumps are being controlled in a duty assist configuration. Each time both pumps are stopped the duty and assist outputs are alternated.

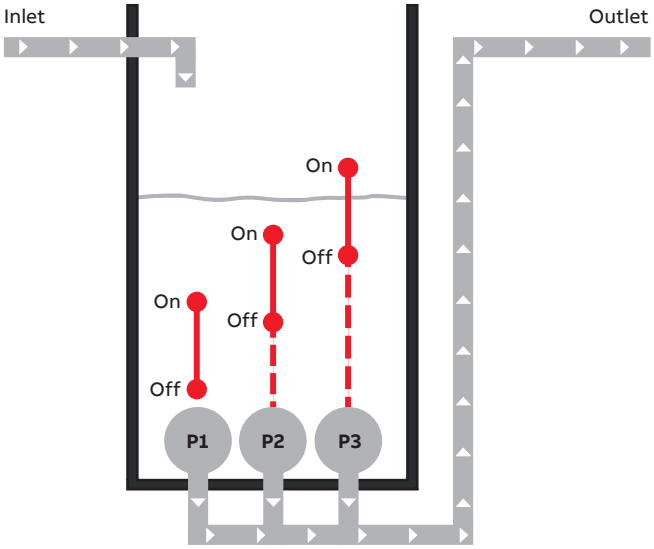

Figure 13 Independent on and off trip points

Problem solving flexibility

Extensive functionality is available to provide flexible problem-solving capability; making the CM50 much more than just a process controller.

Process alarms

8 independent process alarms can monitor any analog signal within the CM50, enabling extensive process monitoring capability. Alarms can be used to drive physical outputs or soft-wired to other functions within the controller.

Real-time alarms

The 'alarm clock' functionality provided by the CM50's real-time alarms enables time-of-day decisions to be introduced into the controller's actions or specific functions to be triggered routinely at specified times.

Delay timers

Event sequencing is enabled through the use of the CM50's delay timers. A predetermined delay and output duration can be programmed into each delay timer and timers can be linked together.

Custom linearizers

The CM50 has 2 independent 20-point custom linearizers that can be applied to any analog signal within the controller. These linearizers can be used in applications such as level-to-volume conversion of a non-linear tank level or to accommodate special input signals or output devices.

Math

8 math blocks provide arithmetic, averaging, min. / max. hold, square root and signal switching functionality. Simple equations can be performed in a single math block or multiple math blocks can be nested together to construct complex equations.

Signal switching 'multiplexer' math blocks switch between 2 analog signals based on a trigger signal. For example, a backup sensor could be selected automatically on failure of a primary sensor.

Logic

8 comprehensive logic equations provide powerful interlock functionality. Inputs and outputs of the logic equations can be soft-wired to any digital signal within the controller to maximize flexibility.

Totalizer

2 totalizers are available on the CM50. The totalizers can configured to perform multiple functions:

- integration against an analog signal to totalize flow
- counting digital pulses
- totalization of flow based on a frequency signal from an electromagnetic flow meter

Communications

Extensive communication options enable the CM50 to be integrated into larger control systems easily or connected to other process instrumentation.

RS 485 MODBUS

Using RS 485 MODBUS, values and status can be communicated to and from the controller in real-time via an RS 485 connection.

Ethernet

Optional Ethernet communications enable the CM50 to be integrated in to an Ethernet network quickly. The following functionality is provided:

- Email
  - Notification of a critical process event or status can be made by email. Multiple events can trigger an email that can be sent to multiple recipients
- Webserver
  - ControlMaster's integrated webserver enables the current status of the process and controller to be viewed remotely using a standard web browser

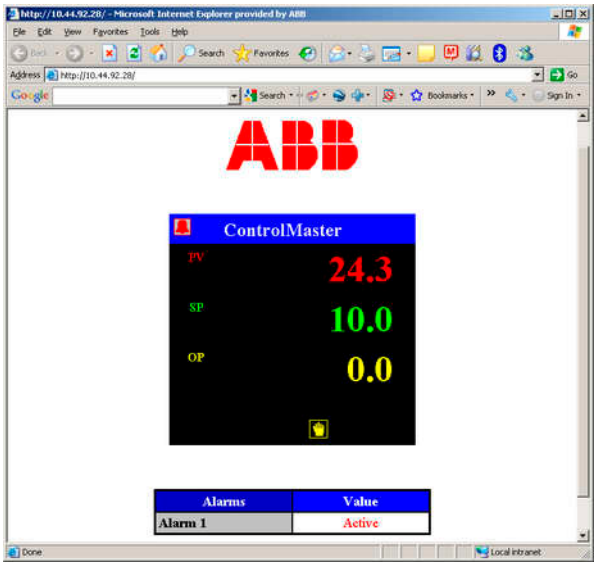

Figure 14 Webserver

- MODBUS TCP
  - Process values and status can be communicated to and from the CM50 in real-time using MODBUS TCP, enabling it to be integrated easily into larger control systems or connected to a data recorder

PC configuration

The CM50 can be fully configured using ABB's ConfigPilot software. Available free of charge, ConfigPilot enables off-line creation and editing of configuration files. Configurations are transferred to and from a controller via its standard IrDA port and a USB IrDA adapter.

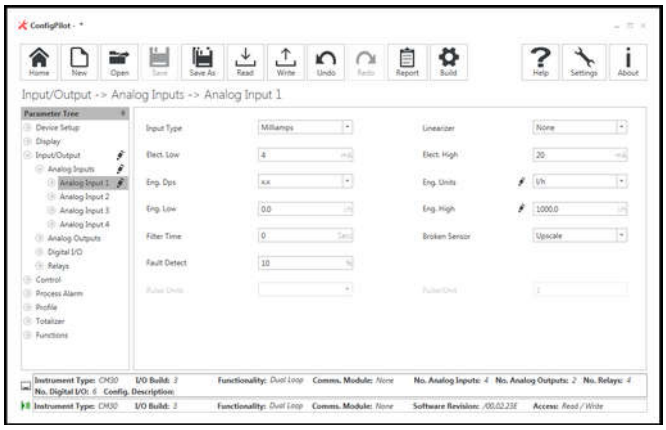

Figure 15 Analog input configuration

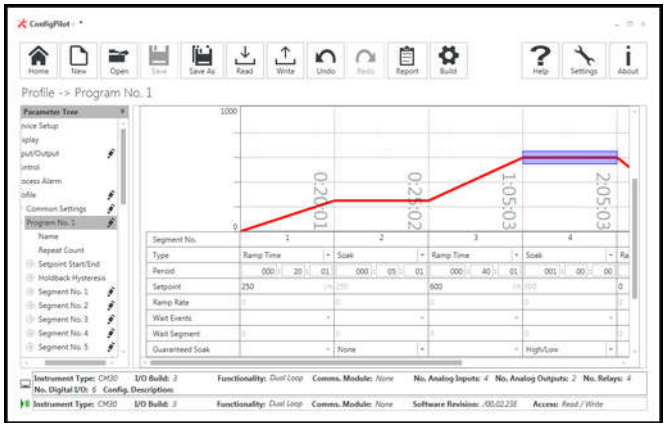

Figure 16 Profile configuration

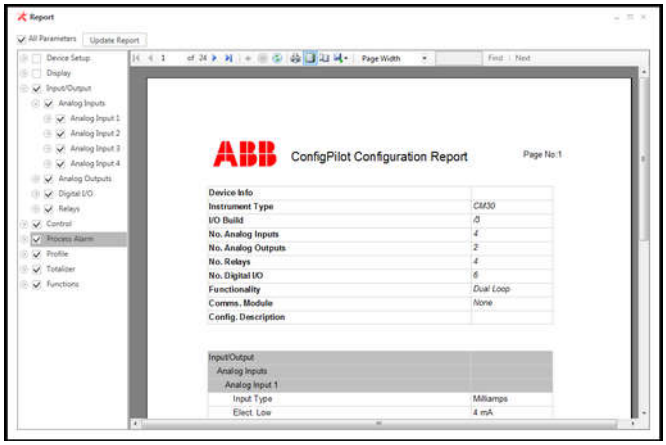

Figure 17 Configuration report generation

Setpoint profile

Setpoint profile capabilities make the CM50 ideally suited to thermal processing applications where a specific temperature profile needs to be followed. Profiles are quickly created by programing a series of segments (for example, ramp, hold, wait or step). Process operators can then easily activate and monitor the required program via dedicated profile operator displays and menus.

Profile control is available in two versions:

- Standard profile:
  - ideal for simple applications standard functionality provides a single program of up to 10 segments.
- Advanced profile:
  - capable of accommodating 30 programs, advanced functionality provides 140 programmable segments and powerful features such as sequencing and timed-, or segment-events.

Fast run mode

When activated fast run mode runs a profile at 8 times normal speed allowing complex or long duration programs to be tested prior to use.

Guaranteed ramp / soak

For processes where strict tolerances must be adhered to during a profile cycle, guaranteed ramp/soak can be applied to appropriate segments. A configurable hysteresis can be applied to a segment; if the process variable exceeds these limits the program is placed on hold until the process recovers.

Once back within limits the profile can be configured to continue, or repeat, the current segment. Hysteresis limits can be above, below or above and below the setpoint value.

Sequencing and interlocks

Advanced profile functionality provides features that enable sequencing and control of peripheral devices that must be activated at specific points during a profile. For example, valves and cooling fans can be driven by segment events that are freely configurable throughout a profile program. In addition, the setpoint for slave controllers can be generated by an analog user value which is programmable for each segment of a profile program.

When interlocks are required, wait segments can be placed in a program. On arriving at a wait segment the profile waits until a required condition is met (for example, digital input received) before continuing with the program.

Dedicated profile displays

To make day-to-day operation as easy as possible, profile control has dedicated display templates. A concise display detailing the program name, status and time remaining is shown to the operator. A more detailed program and segment status information is available on sub-pages.

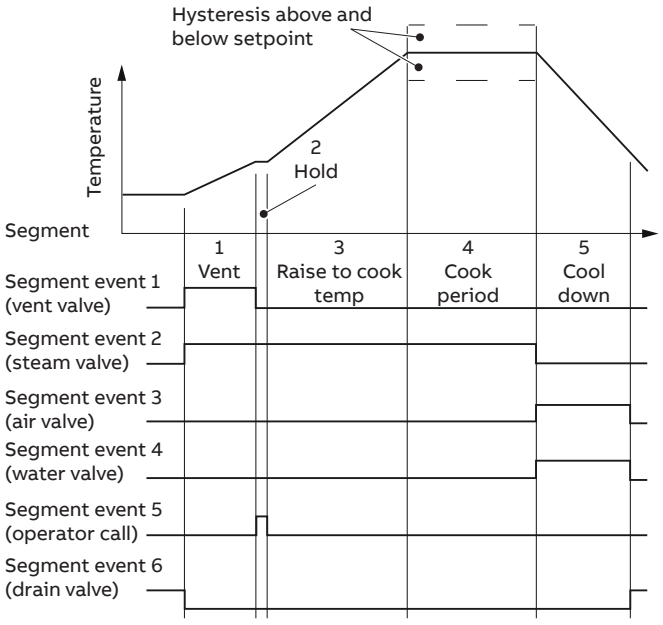

Figure 18 Profile control

Application templates

To minimize commissioning time, the CM50 features up to 20 preconfigured control strategy templates. By selecting the required control strategy, the template configures the CM50's function blocks and display automatically. Customization of the preconfigured templates is also possible, providing the flexibility to create customized solutions.

Single loop

This template provides standard, single loop process control for the regulation of pressure, temperature or flow variables
In this example, the temperature of a product heated by a heat exchanger is regulated via the control of the steam feed to the heat exchanger. This template is available with or without a remote setpoint.

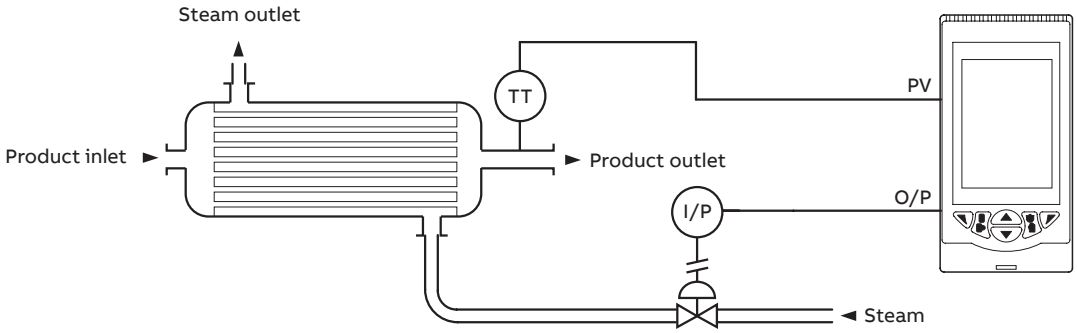

Single loop with feed-forward

This template adds feed-forward functionality to the single-loop template and is available with or without a remote setpoint. Feed-forward control enables the CM50 to anticipate, and respond to, process occurrences not yet detected by the process variable signal.

In this example, the CM50 is regulating the speed of a dosing pump used to neutralize the pH of waste discharge. The flow rate of the waste discharge is monitored and fed forward to the CM50 so that, as the flow rate increases, the speed of the dosing pump increases automatically to neutralize the extra volume of waste discharge.

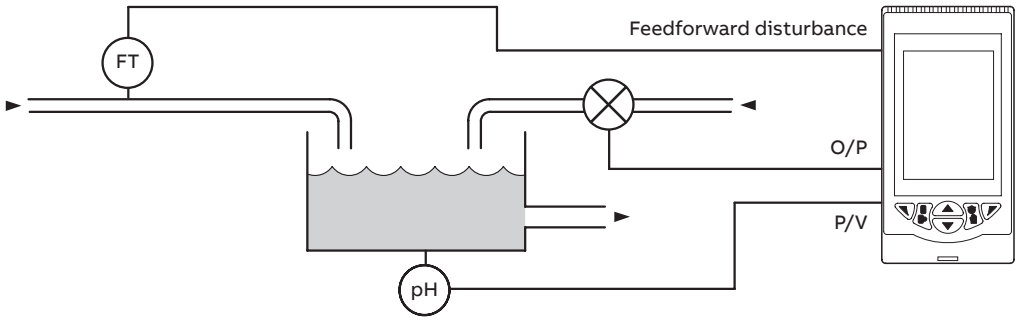

…Application templates

Cascade

The cascade template connects two PID loops together to enhance the control of a master variable (master loop) by manipulation of a slave loop.

In this example, the temperature of a furnace is regulated (master loop) by monitoring and controlling the gas flow rate to the burner (slave loop). By performing slave loop control on the gas flow rate, variations in gas supply can be accounted for and better temperature control performance achieved. This template is available with or without a remote setpoint.

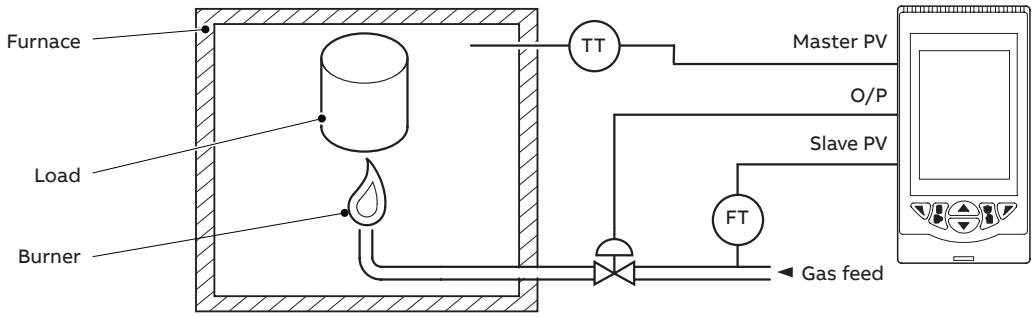

Cascade with feed-forward

This template combines the benefits of the feed-forward and cascade templates.

In this example, the effect of steam demand change on the level within the boiler drum is predicted and accounted for via the feed-forward signal. Feed water supply is then controlled accurately using a ‘slave’ flow loop that accounts for any variations in water supply.

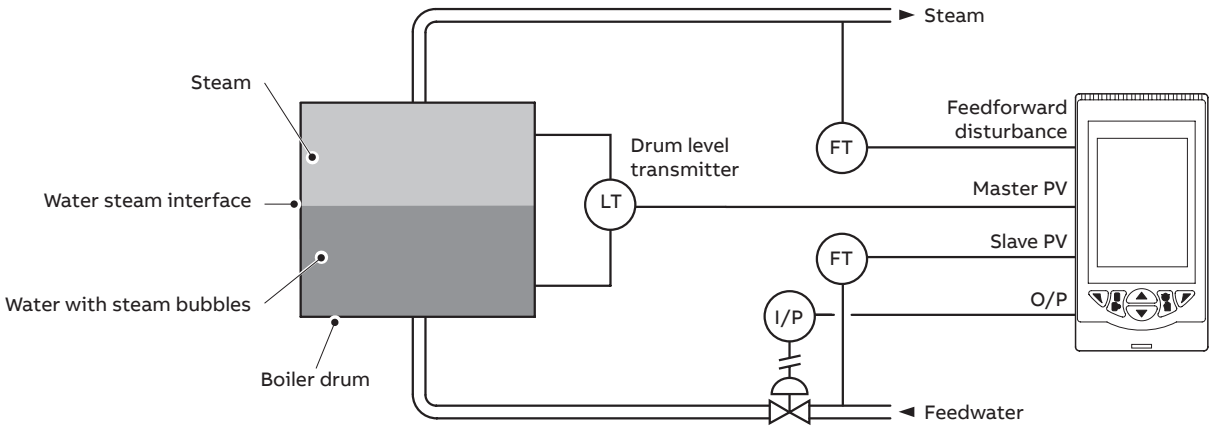

Ratio controller
The ratio controller template configures the CM50 to regulate one process variable against another based on a specified ratio. When using the ratio control template, the CM50's display shows the required ratio (setpoint) and the actual ratio achieved (process variable).

In this example, a controlled amount of 'Flow B' is added to 'Flow A' at a ratio programmed into the CM50.

This template is available with or without an external ratio.

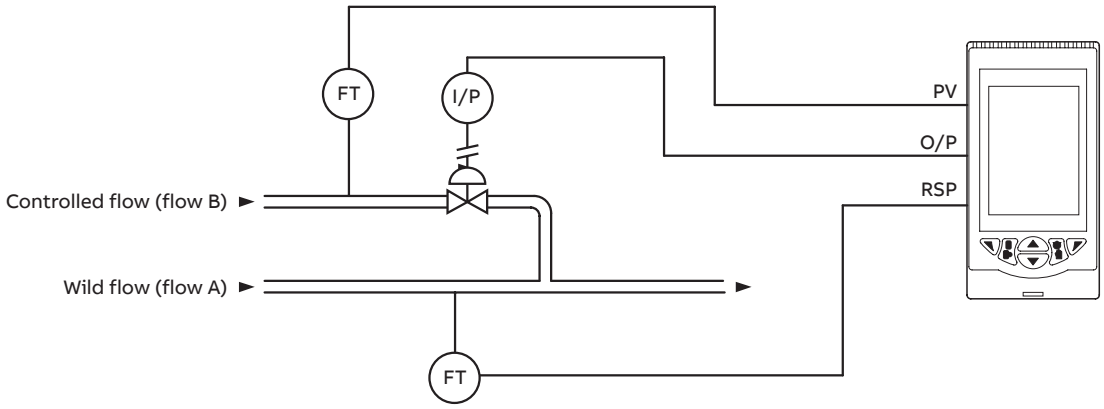

Ratio station
The ratio station template configures the CM50 as an indicator and setpoint generator.

In this example, the CM50 is calculating and indicating the ratio of flow A and flow B. The operator is able to enter the desired ratio on the CM50; the CM50 then retransmits the setting to the slave controller. In many applications, the slave controller is a blind or remotely-located device.

This template is available with or without an external ratio.

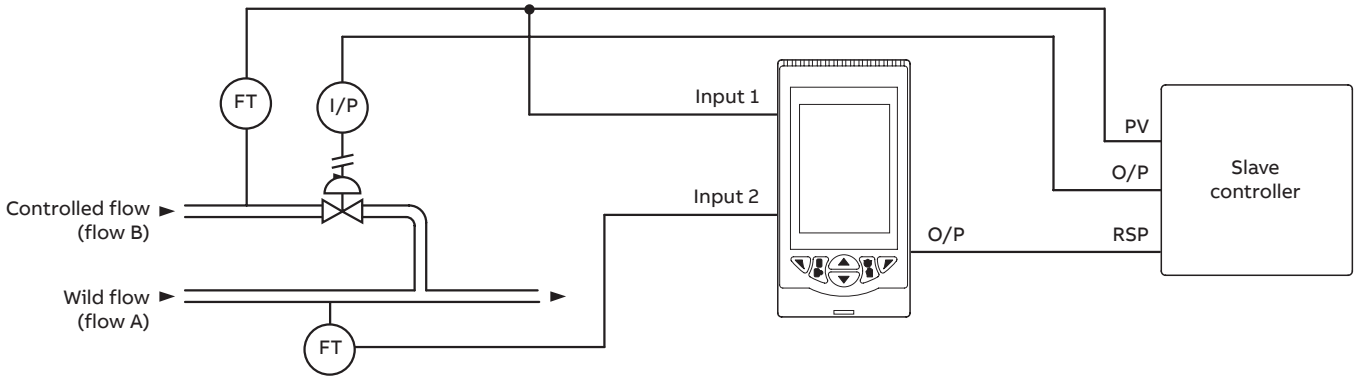

…Application templates

Auto / Manual station and analog backup station

These templates configure the CM50 to backup a master controller, typically a PLC or DCS. A fault condition is detected via a low output signal from the master controller or a digital signal. On detection of a fault signal, the CM50 can take control of the process (analog backup template), freeze its output or switch to a safe output (auto / manual station template). In this example, a critical control of flow is backed-up by the CM50.

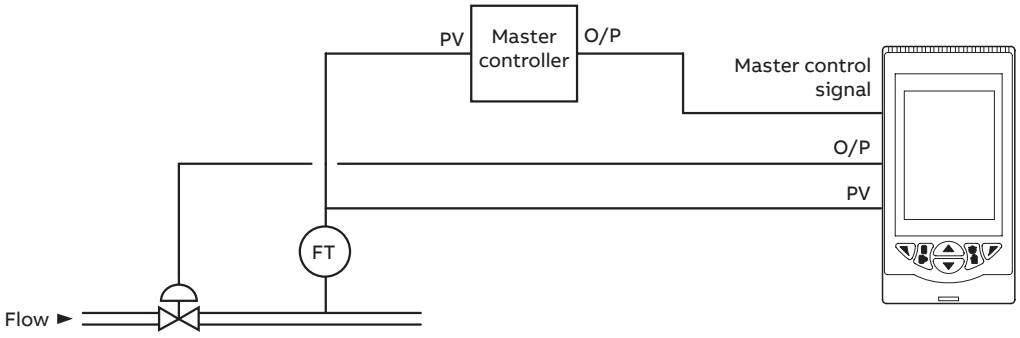

Dual loop

The dual loop template enables a CM50 to act as 2 independent controllers and is available with a remote setpoint for either, or both, control loops. In this example, the temperature and humidity of a climatic chamber are controlled independently.

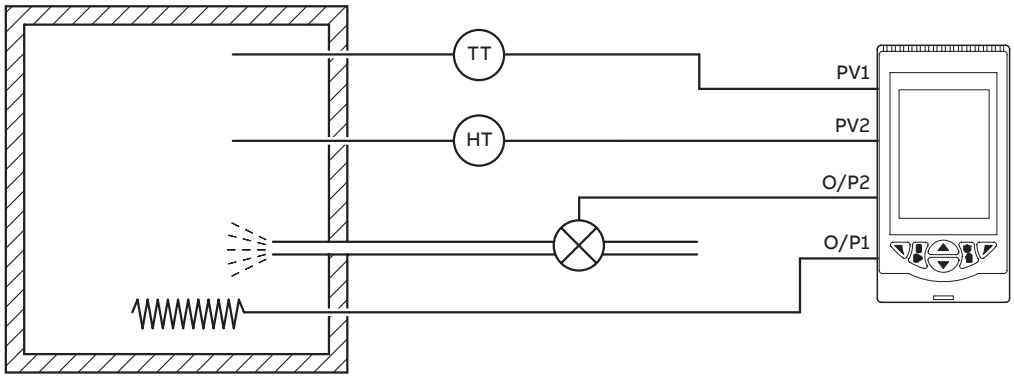

Specification

Operation

Display
Color, ¼ VGA TFT, liquid crystal display (LCD) with built-in backlight
Language
English, German, French, Italian and Spanish
Operator keypad
6 tactile membrane keys
Trend display
Recording of 2 variables
Configurable sample rate (1 second to 5 minutes)
196 samples displayed on screen

Security

Password protection
Basic / Advanced – user-assigned password protection (not set at factory)

Standard functions

Control strategies
Base templates:
Single loop with local setpoint
Single loop with remote setpoint
Standard templates:
Auto / Manual station (low signal detection)
Auto / Manual station (digital signal selection)
Analog backup station (low signal detection)
Analog backup station (digital signal detection)
Single indicator / manual loader station
Dual indicator / manual loader station
Extended templates:
Single loop with feedforward
Single loop with feedforward and remote setpoint
Cascade
Cascade with remote setpoint
Cascade with feedforward
Ratio controller with internal ratio
Ratio controller with external ratio
Ratio station with internal ratio
Ratio station with external ratio
Dual loop templates:
Dual loop with local setpoints
Dual loop with remote setpoint on 1 and local setpoint on 2
Dual loop with remote setpoint on both

Control output types

Current proportioning
Time proportioning
On / Off
Motorized valve with feedback
Motorized valve without feedback
Split output – with combinations of relay, digital output and current outputs

Control parameters

Proportional band *
0.0 to 999.9 %
Integral *
0 to 10000 s
Derivative *
0.0 to 999.9 s
Manual reset
0.0 to 100.0 %

Setpoints

Local
4, selectable via digital input or front panel
Remote
selectable via digital input or front panel keys

Auto tune

On-demand calculation of control settings

Process alarms

Number
8
Types
High / Low process
High / Low latch
Source
Fully configurable (for example – PV, Analog input, Math block inbuilt, OP control loop deviation)
Hysteresis
Level and time
Alarm enable
Enable / Disable individual alarms via a digital signal
Acknowledgement
Via front panel keys or digital signals

Real-time alarms **

Number
2
Programmable
Time
Day
Duration

Bank control **

Number of outputs:
6
Wear levelling:
Rotate or FIFO

* 3 sets of PID parameters when used with Gain Scheduling facility
**Functionality level ‘Standard’ and above only

…Specification

Math blocks *

Number
8
Operators
+, –, x, /
Average, Maximum, Minimum
High / Low / Median select
Square root
Multiplexer

Delay timers *

Number
2
Programmable
Delay
Duration

Logic equations *

Number
8
Elements
15 per equation
Operators
OR, AND, NOR, NAND, NOT, EXOR

Custom linearizer *

Number
2 (total) 9 digit totals
Elements
20 breakpoints

Totalizer **

Number:
2 (total) 9 digit totals
Type:
Analog, digital, frequency or pulse
Statistical calculations:
Average, maximum, minimum (for analog signals)
Update rate:
125 ms

Analog inputs

Universal process inputs
Number
2 (1 standard, 1 optional)
Type
Voltage
Current
Resistance (Ω)
3-Wire RTD
Thermocouple
Digital volt-free
Digital 24 V
Frequency (input 1)
Pulse
Non-universal process inputs
Number
2 (1 standard, 1 optional)
Type
Voltage
Current
Thermocouple ***
Digital volt-free
Digital 24 V

Thermocouple types

B, E, J, K, L, N, R, S, T

Resistance thermometer

Pt100

Other linearizations

$\sqrt{x}$, $x^{3/2}$, $x^{5/2}$, custom linearization

Digital filter

Programmable 0 to 60 s

Display range

–9999 to 99999

Update rate

125 ms

Common mode noise rejection

> 120 dB at 50 / 60 Hz with 300 Ω imbalance resistance

Normal (series) mode noise rejection

> 60 dB at 50 / 60 Hz

CJC rejection ratio

Stability
0.05 °C/°C change in ambient temperature

*Functionality level ‘Standard’ only

** Functionality level ‘Extended’ and above only

*** Only if universal process input is configured as ‘Thermocouple’

Temperature stability

0.02 %/°C or 2 µV/°C (1 µV/°F)

Long term (input) drift

< 0.1 % of reading or 10 µV annually

Input impedance

> 10 MΩ (mV input)

10 Ω (mA input)

Inputs

Thermocouple	Maximum range °C (°F)	Accuracy (% of reading)
B	–18 to 1800 (0 to 3270)	0.1 % or ±2 °C (3.6 °F) (above 200 °C [392 °F]) *
E	–100 to 900 (–140 to 1650)	0.1 % or ±0.5 °C (0.9 °F)
J	–100 to 900 (–140 to 1650)	0.1 % or ±0.5 °C (0.9 °F)
K	–100 to 1300 (–140 to 2350)	0.1 % or ±0.5 °C (0.9 °F)
L	–100 to 900 (–140 to 1650)	0.1 % or ±1.5 °C (2.7 °F)
N	–200 to 1300 (–325 to 2350)	0.1 % or ±0.5 °C (0.9 °F)
R	–18 to 1700 (0 to 3000)	0.1 % or ±1 °C (1.8 °F) (above 300 °C [540 °F]) *
S	–18 to 1700 (0 to 3000)	0.1 % or ±1 °C (1.8 °F) (above 200 °C [392 °F]) *
T	–250 to 300 (–400 to 550)	0.1 % or ±0.5 °C (0.9 °F) (above –150 °C [–238 °F]) *

* Accuracy is not guaranteed at temperatures below this value

RTD	Maximum range °C (°F)	Accuracy (% of reading)
Pt100	–200 to 600 (–325 to 1100)	0.1 % or ±0.5 °C (0.9 °F)

Linear inputs	Standard analog input	Accuracy (% of reading)
Millivolts	0 to 150 mV	0.1 % or ±20 µV
Milliamps	0 to 45 mA	0.2 % or ±4 µA
Volts	0 to 25 V	0.2 % or ±20 mV
Resistance (low)	0 to 550 Ω	0.2 % or ±0.1 Ω
Resistance (high)	0 to 10 kΩ	0.5 % or ±10 Ω
Sample Interval		125 ms per sample

Digital inputs	
Type	Volt-free or 24 V
Minimum pulse duration	Analog inputs 1 and 2: • Single inputs configured – 250 ms • Both inputs configured as analog or digital – 500 ms Analog inputs 3 and 4: • Single inputs configured – 250 ms • Both inputs configured as analog or digital – 500 ms Consider analog inputs 1/2 and 3/4 independently

Frequency input*	
Frequency range	0 to 6000 Hz
1-signal	15 to 30 V
0-signal	–3 to 5 V

*For use with devices with open collector outputs

Outputs

Controls / Retransmission outputs

Number

2 (1 standard, 1 optional)

Type

Configurable as analog or digital pulse

Isolation

Galvanically isolated from the rest of the circuitry, 500 V for 1 minute

Analog range

0 to 20 mA programmable

Load

750 Ω max.

Accuracy

0.25 % of output or ±10 µA

Relays

Number

4 (2 standard, 2 optional)

Type

Selectable as NO or NC (by jumper)

Contact ratings

5 A, 240 V

Update rate

125 ms

...Specification

Digital I/O

Number
6 (2 standard, 4optional)
Type
User-programmable as input or output
Minimum input pulse duration – 125 ms
Input
Volt-free or 24 V DC
1-signal 15 to 30 V
0-signal –3 to 5 V
Conforms to IEC 61131-2
Output
Open collector output
30 V, 100 mA max. switched
Conforms to IEC 61131-2
Update rate
125 ms

2-Wire transmitter power supply

Number
2 (1 standard, 1 optional)
Voltage
24 V DC
Drive
2 loops for each transmitter PSU, 45 mA max.

Communications

Note. Only one communications option can be fitted per controller.

IrDA configuration port (standard)
Baud rate
Up to 115 kBaud
Distance
Up to 1 m (3 ft)
Functions
Firmware upgrade
Configuration upload / download
Ethernet (optional)
Type
10BaseT
Connector
RJ 45
Protocols
TCP/IP
HTTP
MODBUS TCP (Slave)
Web server
Built-in – enables remote monitoring using standard web browsers
Email
- Can be configured to be sent on the occurrence of a specified event
- Up to 3 recipients
- Up to 4 trigger sources with configurable tag

MODBUS * RTU (optional)
Baud rate
Up to 115 kBaud
Isolation
Galvanically isolated from the rest of the circuitry, 500 V DC for 1 minute

EMC

Emissions & immunity
Meets requirements of IEC 61326 for an industrial environment

Environmental

Operating temperature range
0 to 55 °C (32 to 131 °F)
Operating humidity range
5 to 95 % RH (non-condensing)
Storage temperature range
–20 to 70 °C (–4 to 158 °F)
Enclosure sealing
Front face
IP 66 & NEMA 4X
Rest of enclosure
IP 20
Vibration
Conforms to EN60068–2–6
Altitude
2000 m (6562 ft) max. above sea level

* MODBUS is a registered trademark of the MODBUS-IDA organization

Safety

Approvals and certifications

EN 61010-1

cULus

General safety

Pollution category 2

Insulation category 2

Isolation

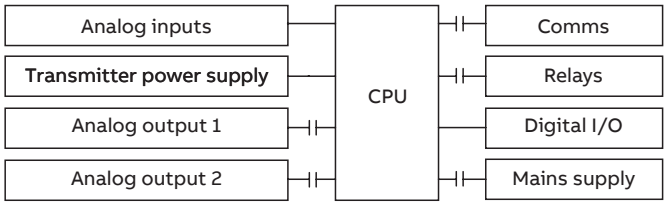

Key

⊣⊢ = Isolation

Electrical

Supply ranges

- 100 to 240 V AC ±10 % (90 V min. to 264 V max.) 50 / 60 Hz
- 10 to 36 V DC (optional)

Power consumption

10 W max.

Power interruption protection

No effect for interrupts of up to 60 ms

Physical

Size

144 x 76 x 146 mm (5.6 x 3.0 x 5.7 in.)

Weight

0.58 kg (1.3 lb) approx. (unpacked)

Panel cutout

138 x 68 (5.4 x 2.7 in.), 123 mm (4.9 in.) behind panel

Case material

Glass-filled polycarbonate

Electrical connections

Rear view



Standard connections

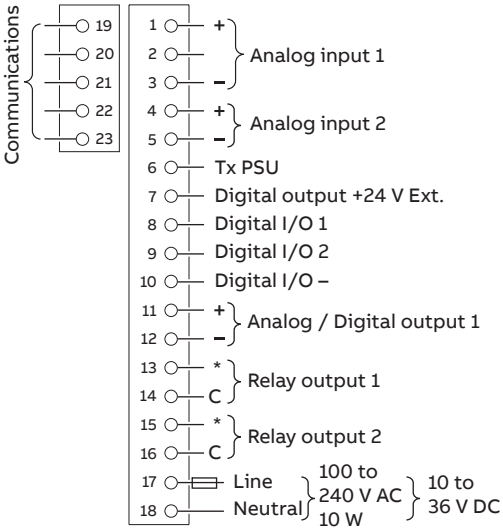

Option board 1

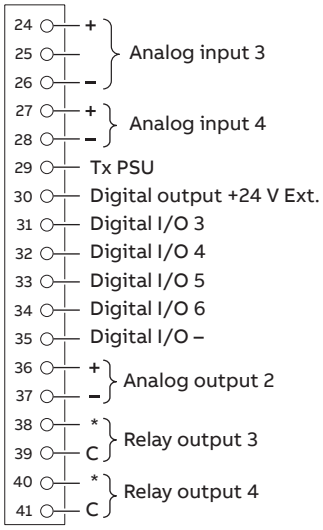

Rear view



* N/O or N/C selection made via jumper

Overall dimensions

Dimensions in mm (in.)

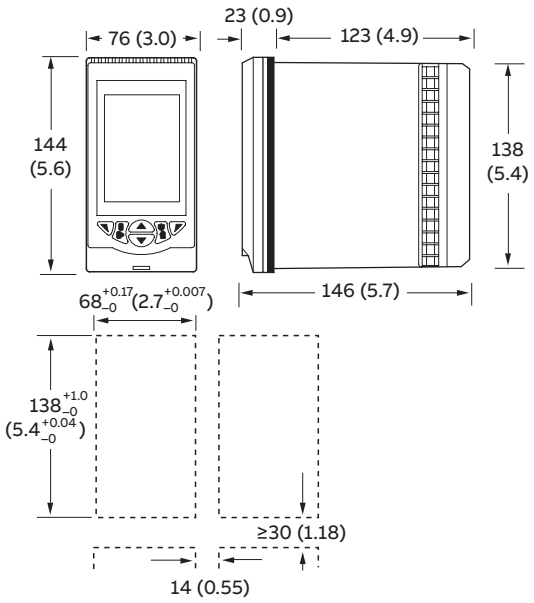

Standard accessories

Included with each controller:

- Panel mounting clamps
- Instruction manual
- Bezel release tool
- Cold junction thermistor

Optional accessories

- ConfigPilot PC configuration kit CM30/0715
- After-sales engineered configuration service ENG/CNTRL

Ordering information

Controlmaster CM50 universal process controller, 1/2 DIN	**CM50/**	**X**	**X**	**X**	**X**	**X**	**X**	**X**	**/XXX**	**OPT**
I/O build										
2 analog inputs, 1 analog output, 2 digital I/O and 2 relays (Basic)		0								
4 analog inputs, 2 analog outputs, 6 digital I/O and 4 relays (Basic + option board 1)		1								
Template / Functionality level										
Base			0							
Standard			S							
Extended			E							
Dual loop			D							
Communications										
None				0						
Ethernet				E						
RS 485 MODBUS				M						
Approval										
Standard CE					S					
cULus approval					U					
Power supply										
90 to 264 V AC						0				
10 to 36 V DC						1				
Language										
English							E			
German							G			
French							F			
Italian							I			
Spanish							S			
Special features										
None								0		
Unbranded front panel *								B		
Configuration										
Standard									STD	
Custom configuration (customer to complete and supply CM50 custom configuration sheet – INF11/091–EN)									CUS	
Engineered configuration (customer to supply configuration details required)									ENG	
Calibration certificate **										C1
Printed instruction manual										
English										M5
German										M1
Spanish										M3
French										M4
Italian										M2

* Not available in conjunction with cULus approval.

** When a calibration certificate is ordered it is performed according to the specified configuration type:
CUS/ENG – Inputs and outputs calibrated according to the customer supplied configuration details and ranges.
STD – Inputs and outputs calibrated according to the instrument factory standard configuration and ranges.

Notes

Sales

Service

Software

ABB Measurement & Analytics

For your local ABB contact, visit:
www.abb.com/contacts

For more product information, visit:
www.abb.com/measurement

We reserve the right to make technical changes or modify the contents of this document without prior notice. With regard to purchase orders, the agreed particulars shall prevail. ABB does not accept any responsibility whatsoever for potential errors or possible lack of information in this document.

We reserve all rights in this document and in the subject matter and illustrations contained therein. Any reproduction, disclosure to third parties or utilization of its contents – in whole or in parts – is forbidden without prior written consent of ABB.

© Copyright 2021 ABB.
All rights reserved.

3KXC405001R1001

DS/CM50-EN Rev. T 07.2021