

## Model Number

**V15-W-10M-PVC**

Female cordset, M12, 5-pin, PVC cable

## Features

- Knurled nut suitable for tool assembly
- Immunity to vibration, with mechanical latching
- Gold plated contacts
- Degree of protection IP67 / IP68 / IP69K

## Dimensions

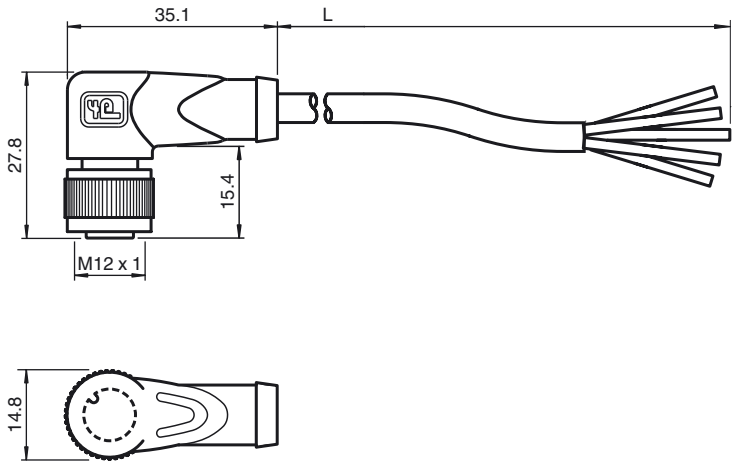


## Technical data

| | | |
|---|---|---|
| **General specifications** | | |
| Number of pins | | 5 |
| **Electrical specifications** | | |
| Operating voltage | $U_B$ | max. 60 V AC/DC |
| Test voltage | | > 1500 $V_{eff}$ AC |
| Operating current | $I_B$ | max. 4 A |
| Volume resistance | | < 5 mΩ |
| **Ambient conditions** | | |
| Ambient temperature | | Body: -40 ... 90 °C (-40 ... 194 °F)<br>cable, fixed: -25 ... 70 °C (-13 ... 158 °F)<br>cable, flexing: -5 ... 70 °C (23 ... 158 °F) |
| Pollution Degree | | 3 |
| **Mechanical specifications** | | |
| Contact elements | | spring-loaded contact socket |
| Pin diameter | | 1 mm |
| Degree of protection | | IP67 / IP68 / IP69k |
| Material | | |
| Contacts | | CuSn / Au |
| Contact surface | | Au |
| Body | | TPU, black |
| Cable | | PVC |
| Slotted nut | | Diecast zinc |
| Core insolation | | PVC |
| Cable | | fine-strand, flexible |
| Sheath diameter | | Ø 4.8 mm |
| Bending radius | | > 10 x cable diameter, moving |
| Color | | grey |
| Cores | | 5 x 0.34 $mm^2$ |
| Conductor construction | | 19 x 0.15 mm Ø |
| Length | L | 10 m |
| Flammability | | |
| Contact material | | 94 HB |
| Housing | | 94 V-2 |
| **Compliance with standards and directives** | | |
| Standard conformity | | |
| Degree of protection | | EN 60529:2000 |
| Standards | | IEC 61076-2-101:2008 |

## Electrical connection

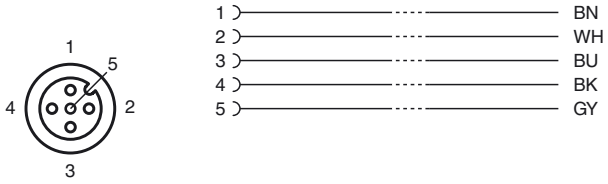


Release date: 2015-01-08 11:27 Date of issue: 2015-01-08 109483_eng.xml