Rocker Switch

Single and Double Pole

LR Series



Features

- Lighted and non-lighted versions
- Industry standard cutout
- RoHS Compliant
- Minimum 100,000 operations mechanical life

Standard Parts[1]

North America and Europe

LRA22H2BBBNN	LRA22H2FBBNN	LRA32H2DBBNN	LRA22H2BBGLN	LRA22H2FBRLN	LRA32H2FBBNN
LRA22H2BBRLN	LRA32H2BBBNN	LRA32H2FBGLN	LRA22H2DBBNN	LRA32H2BBRLN	LRA32H2FBRLN

Europe

LRA22H2BBGEN	LRA32H2BBGLN	LRA22H2BBREN	LRA32H2BBREN	LRA22H2EBBNN	LRA32H2FBGEN
LRA22H2FBREN	LRA32H2FBREN	LRA32H2BBGEN			

[1]The part number configuration matrix below provides details to the part numbers above.
For configurable part numbers that are not listed above or for custom part numbers, contact the factory or your distributor.

Part Number Breakdown

LRA22H2FBBNN

LR A 2 2 H 2 — F B B N N

Series

LR

Contact Rating[2]

A

Circuitry

2	Single pole
3	Double pole

Switch Function

2	ON-OFF

Terminal Type

B	PC thru-hole left angle
H	4.8 mm (0.187”) solder tag
L	PC thru-hole right angle
M	PC thru-hole straight

Actuator Type

2	Curved

[2]See Electrical Specifications section

Actuator Marking

B	Blank	
D	OFF	ON
E	O	I
F	O	—
G	•	

Housing Color

B	Black
E	Charcoal Grey
W	White
Y	Grey

Actuator Color

A	Amber
B	Black
E	Charcoal Grey
G	Green
R	Red
W	White
Y	Grey

Lighted

N	Non-lighted
E	250 VAC bulb
L	125 VAC bulb
F	5 VDC LED[3]
G	6 VDC LED[3]
H	12 VDC LED[3]

Body Type

N[4]	No rocker boot

[3]Switches have no agency DC ratings
[4]A splash-proof boot can be ordered separately as part number 00150644

Electrical Specifications

Inrush Rating	24 A		
Dielectric Strength	1000 VAC for 1 minute		
Insulation Resistance	100 MΩ min at 500 VDC		
Initial Contact Resistance	0.020 Ω max		
Electrical Ratings	EN61058-1 10 (4) A 250 V~ T125/55	UL Gen Purpose 10 A 125 VAC / 8 A 250 VAC	UL HP ¼ HP 125 VAC / 250 VAC
Electrical Life at Rated Load Minimum Operations UL File No: E23301	VDE 10,000	UL 6,000	

Material and Environmental Specifications

Actuator (non-lighted)	Nylon 66 94V-2
Actuator (lighted)	Polycarbonate
Base	Nylon 66 94V-2
Spring	Steel Wire
Contacts	Silver Alloy
Movable Arm	Copper Alloy
Terminals	Tin-Plated Copper Alloy
Operating Temperature Range	-20 ^{O}C to +65 ^{O}C (-4 ^{O}F to +149 ^{O}F)

Circuitry and Switch Functions

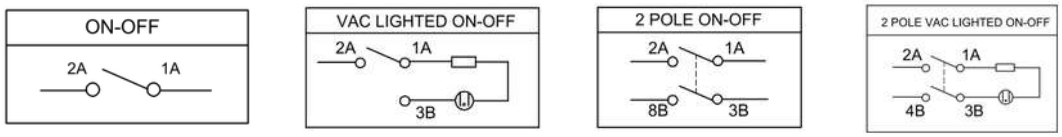

Dimensions mm (inches)

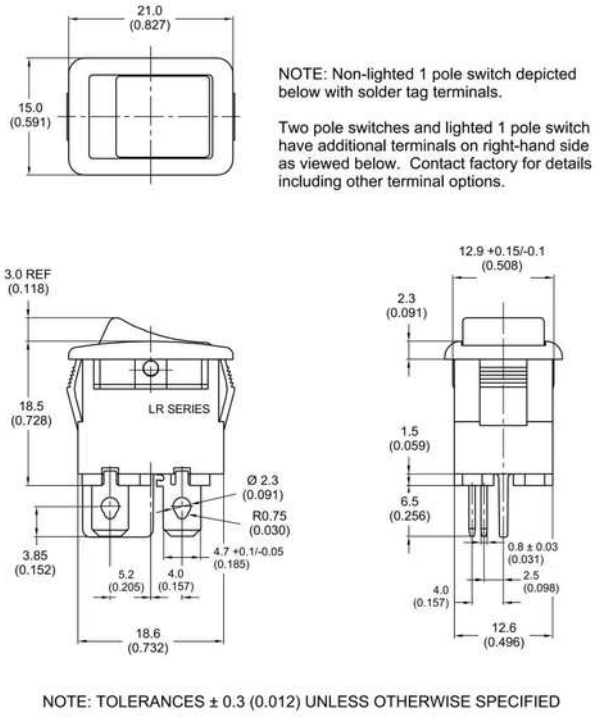

NOTE: TOLERANCES ± 0.3 (0.012) UNLESS OTHERWISE SPECIFIED

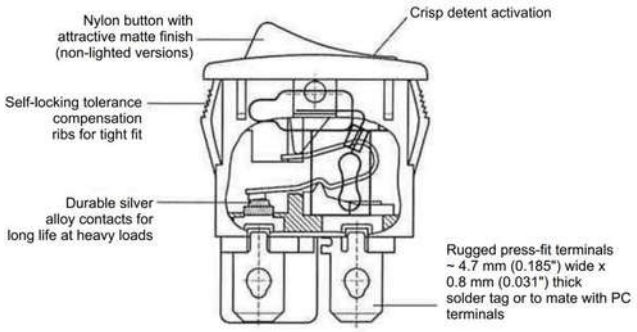

Recommended Panel Cut-Out Dimensions

Panel thickness	X Dimension	Y Dimension
0.75 to 1.25 (0.030 to 0.049)	19.2 +0.1/-0 (0.756)	12.9 +0.15/-0 (0.508)
1.25 to 2.00 (0.049 to 0.079)	19.4 +0.1/-0 (0.764)	12.9 +0.15/-0 (0.508)
2.00 to 3.00 (0.079 to 0.118)	19.8 +0.1/-0 (0.780)	12.9 +0.15/-0 (0.508)