JUMO GmbH & Co. KG
Delivery address: Mackenrodtstraße 14
36039 Fulda, Germany
Postal address: 36035 Fulda, Germany
Phone: +49 661 6003-0
Fax: +49 661 6003-607
E-mail: mail@jumo.net
Internet: www.jumo.net

JUMO Instrument Co. Ltd.
JUMO House
Temple Bank, Riverway
Harlow, Essex CM20 2DY, UK
Phone: +44 1279 635533
Fax: +44 1279 635262
E-mail: sales@jumo.co.uk
Internet: www.jumo.co.uk

JUMO Process Control, Inc.
6733 Myers Road
East Syracuse, NY 13057, USA
Phone: 315-437-5866
1-800-554-5866
Fax: 315-437-5860
E-mail: info.us@jumo.net
Internet: www.jumousa.com

Panel-mounted Thermostats

JUMO heatTHERM, type 602030 and 602031

Special features

- Stable switching point position due to ambient temperature compensation (standard)
- Max. switching capacity 16 A, 400 V
- Operating life at least 250,000 switching cycles for TR and TW
- Control ranges of up to 500 °C are possible
- STB with extensive setting range: 250 K at 250 °∠
- Switching point deviation during the entire operating life of up to ± 5 %

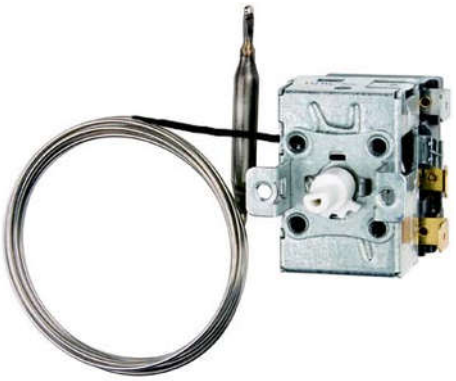

Type 602030 / 01

Brief description

Thermostats control and monitor thermal processes.

The JUMO heatTHERM is available as temperature controller TR, temperature monitor TW (type 602030), safety temperature monitor STW, or safety temperature limiter STB (type 602031).

The panel-mounted thermostat operates according to the fluid expansion principle. The electrical switching element is a snap-action switch.

The panel-mounted thermostat is RoHS-compliant and cadmium-free.



Type 602030 / 02



Type 602030 / 20
Type 602031 / 21



Type 602030 / 80
Type 602031 / 81

Approvals/approval marks (see "Technical Data")

DIN Geprüft · DGRL 97/23/EG · c UL us · PCT

JUMO GmbH & Co. KG
Delivery address: Mackenrodtstraße 14
36039 Fulda, Germany
Postal address: 36035 Fulda, Germany
Phone: +49 661 6003-0
Fax: +49 661 6003-607
E-mail: mail@jumo.net
Internet: www.jumo.net

JUMO Instrument Co. Ltd.
JUMO House
Temple Bank, Riverway
Harlow, Essex CM20 2DY, UK
Phone: +44 1279 635533
Fax: +44 1279 635262
E-mail: sales@jumo.co.uk
Internet: www.jumo.co.uk

JUMO Process Control, Inc.
6733 Myers Road
East Syracuse, NY 13057, USA
Phone: 315-437-5866
1-800-554-5866
Fax: 315-437-5860
E-mail: info.us@jumo.net
Internet: www.jumousa.com

Technical data

Switching function

Temperature controller TR / temperature monitor TW	If the temperature on the temperature probe exceeds the setpoint value, the microswitch is activated by the transmission mechanics and the electrical circuit is opened or closed. If the temperature falls below the selected setpoint value (by the amount of the switching differential), the microswitch is reset to its initial position.
Safety temperature monitor STW	If the temperature on the temperature probe exceeds the setpoint value, the snap-action switch is activated and the electrical circuit is opened or closed. If the temperature falls below the selected setpoint value (by the amount of the switching differential), the snap-action switch is reset to its initial position. If the probe has cooled down to a temperature below approx. -20 °C the electrical circuit opens - however it closes again when the temperature rises. If the measuring system is destroyed (i.e. if the expansion fluid emerges) the pressure in the diaphragm drops and permanently opens the electrical circuit.
Safety temperature limiter STB with restart lock and self-monitoring	If the temperature on the temperature probe exceeds the switching point, the snap-action switch is activated, the electrical circuit is opened, and the snap-action switch is mechanically locked. The unlocking difference depends on the control range. Precise values can be attained from the respective device type. They are also available upon request. If the probe has cooled down to a temperature below approx. -20 °C the electrical circuit opens - however it closes again when the temperature rises. If the measuring system is destroyed (i.e. if the expansion fluid emerges) the pressure in the diaphragm drops and permanently opens the electrical circuit. Unlocking is no longer possible.

Temperature compensation

When the ambient temperature on the switching head and the capillary deviates — from the calibration ambient temperature of +22 °C — a switching point offset occurs. This switching point offset is reduced to a minimum due to the temperature compensation.

JUMO GmbH & Co. KG
Delivery address: Mackenrodtstraße 14
36039 Fulda, Germany
Postal address: 36035 Fulda, Germany
Phone: +49 661 6003-0
Fax: +49 661 6003-607
E-mail: mail@jumo.net
Internet: www.jumo.net

JUMO Instrument Co. Ltd.
JUMO House
Temple Bank, Riverway
Harlow, Essex CM20 2DY, UK
Phone: +44 1279 635533
Fax: +44 1279 635262
E-mail: sales@jumo.co.uk
Internet: www.jumo.co.uk

JUMO Process Control, Inc.
6733 Myers Road
East Syracuse, NY 13057, USA
Phone: 315-437-5866
1-800-554-5866
Fax: 315-437-5860
E-mail: info.us@jumo.net
Internet: www.jumousa.com

Technical data

Case

Case	Sheet steel, galvanized
Protection type	IP 00 according to EN 60529
Switching socket	Polyester resin molding compound, black
Max. permissible ambient temperature	For transport and storage: -40 to +80 °C In use: Max. +80 °C
Rated position (NL)	Any
Weight	Approx. 0.12 kg
Capillary	2,000 mm including 460 mm protective tubing as standard, min. bending radius of the capillary 5 mm Material no. Cu-DHP

Electrical data

Electrical connection	Snap-action switch with single-pole changeover contact		
Switching capacity	TR / TW	STW	STB
	On the N/C contact (contact deck 1-2): AC 400 V +10 %, 16 A, AC 230 V +10 %, 16 (2.5) A, cos φ = 1 (0.6), DC 230 V+10 %, 0.25 A		
Switching capacity	On the N/O contact (contact deck 1-4): AC 400 V +10 %, 6.3 A, AC 230 V +10 %, 6.3 (2.5) A, cos φ = 1 (0.6), DC 230 V +10 %, 0.25 A		On the signal contact (contact deck 1-4): AC 400 V +10 %, 2 A, AC 230 V +10 %, 2 (04) A, cos φ = 1 (0.6), DC 230 V +10 %, 0.25 A
	Snap-action switch with gold plating - extra code 702: AC / DC 24 V, 0.1 A)		
Electrical connection	A 6.3-0.8 according to DIN 46244		
Switching reliability	To ensure the greatest possible switching reliability, we recommend a minimum load of: AC / DC = 24 V, 100 mA for silver contacts AC / DC = 10 V, 5 mA for gold-plated contacts (TZ 702)		

	Switching function	Rated value		
Switching differential in % of the control range span	TR / TW	2.5 %	Standard	
	TR / TW	7 %	Upon request	
	STW	7 %	Standard	
Ambient temperature influence	When the ambient temperature on the switching head and the capillary deviates from the calibration ambient temperature of +22 °C, a switching point offset of approx. -0.1 K/K occurs.			
Switching point accuracy	Switching differential		Scale beginning	Upper third
TR / TW	2.5 %	Standard	± 6 %	± 3 %
	7 %	Upon request	± 8 %	± 4 %
STW / STB	7 %	Control range	In the "first half“	In the "second half“
		+70 to 130 °C	+0/-12 K	+0/-5 K
		+95 to 120 °C	+0/-5 K	+0/-5 K
		+20 to 150 °C	+0/-15 K	+0/-10 K
		+50 to 300 °C	+0/-30 K	+0/-15 K

JUMO GmbH & Co. KG
Delivery address: Mackenrodtstraße 14
36039 Fulda, Germany
Postal address: 36035 Fulda, Germany
Phone: +49 661 6003-0
Fax: +49 661 6003-607
E-mail: mail@jumo.net
Internet: www.jumo.net

JUMO Instrument Co. Ltd.
JUMO House
Temple Bank, Riverway
Harlow, Essex CM20 2DY, UK
Phone: +44 1279 635533
Fax: +44 1279 635262
E-mail: sales@jumo.co.uk
Internet: www.jumo.co.uk

JUMO Process Control, Inc.
6733 Myers Road
East Syracuse, NY 13057, USA
Phone: 315-437-5866
1-800-554-5866
Fax: 315-437-5860
E-mail: info.us@jumo.net
Internet: www.jumousa.com

Approvals/approval marks

Approval marks	Testing agency	Certificates/certification number	Inspection basis	Valid for
DIN	DIN CERTCO / TÜV Süd	STB1169	DIN EN 14597	JUMO heatTHERM (STB)
DIN	DIN CERTCO / TÜV Süd	STW(STB)1190	DIN EN 14597	JUMO heatTHERM (STW(STB))
DIN	TÜV Süd (German Technical Inspection Agency)	TR116807	DIN EN 14597	JUMO heatTHERM (TR)
DIN	TÜV Süd (German Technical Inspection Agency)	TW118907	DIN EN 14597	JUMO heatTHERM (TW)
DIN	TÜV Süd (German Technical Inspection Agency)	B_{10d} = 250,000*	DIN EN ISO 13849-1	JUMO heatTHERM
c UL us	UL Germany	E66358 Vol. 1, Sec.7	UL 873	JUMO heatTHERM
c UL us	UL Germany	MH45736 Vol. 1, Sec.1	UL 353	JUMO heatTHERM (STB)
DGRL	TÜV Süd (German Technical Inspection Agency)	IS-TAF-MUC 07113377017	97/23/EC	JUMO heatTHERM (STW/STB)
GOST	Moscow	РОСС DE.АИ84.B00624	GOST Standard, Russia	JUMO heatTHERM

* For further details see: Safety manual (B 602031.9) JUMO heatTHERM (-AT), (-DR) 602031, 603070.
Switching capacity check implemented at 16 A, 230 V, ohmic load.

Wiring diagrams

Type 602030

Type 602030/01

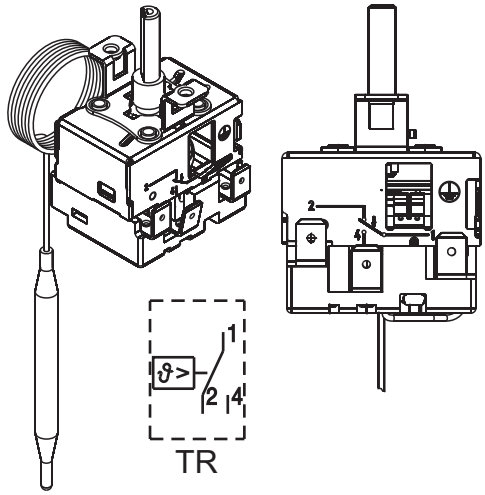

Type 602030/02

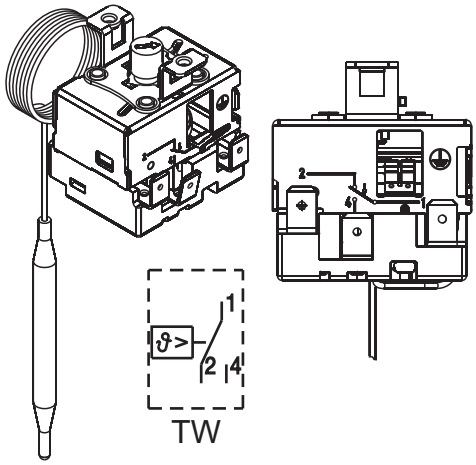

Type 602031

Type 602031/20 and 602031/21

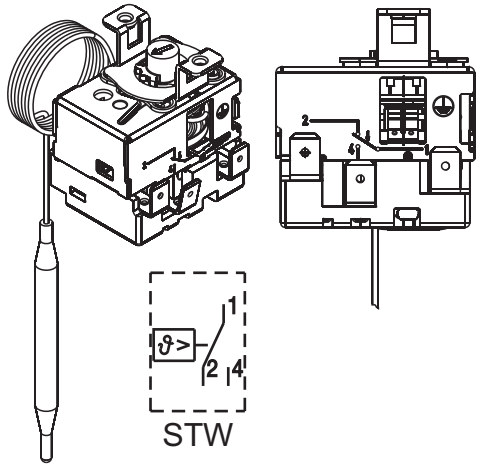

Type 602031/80 and 602031/81

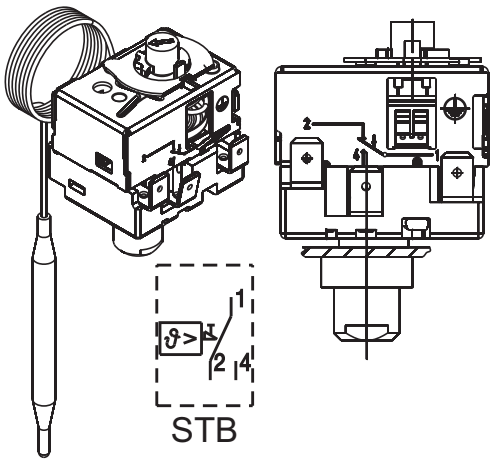

JUMO GmbH & Co. KG
Delivery address: Mackenrodtstraße 14
36039 Fulda, Germany
Postal address: 36035 Fulda, Germany
Phone: +49 661 6003-0
Fax: +49 661 6003-607
E-mail: mail@jumo.net
Internet: www.jumo.net

JUMO Instrument Co. Ltd.
JUMO House
Temple Bank, Riverway
Harlow, Essex CM20 2DY, UK
Phone: +44 1279 635533
Fax: +44 1279 635262
E-mail: sales@jumo.co.uk
Internet: www.jumo.co.uk

JUMO Process Control, Inc.
6733 Myers Road
East Syracuse, NY 13057, USA
Phone: 315-437-5866
1-800-554-5866
Fax: 315-437-5860
E-mail: info.us@jumo.net
Internet: www.jumousa.com

Devices in stock

Dimensions

Type 602030/01

- Temperature controller
- Compensated ambient temperature (standard)
- Max. switching capacity 16 A, 400 V
- Operating life at least 250,000 switching cycles
- Switching point deviation (drift) during the entire operating life of up to ± 5 %

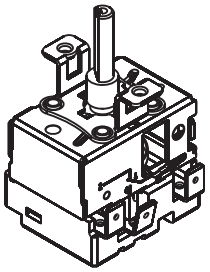

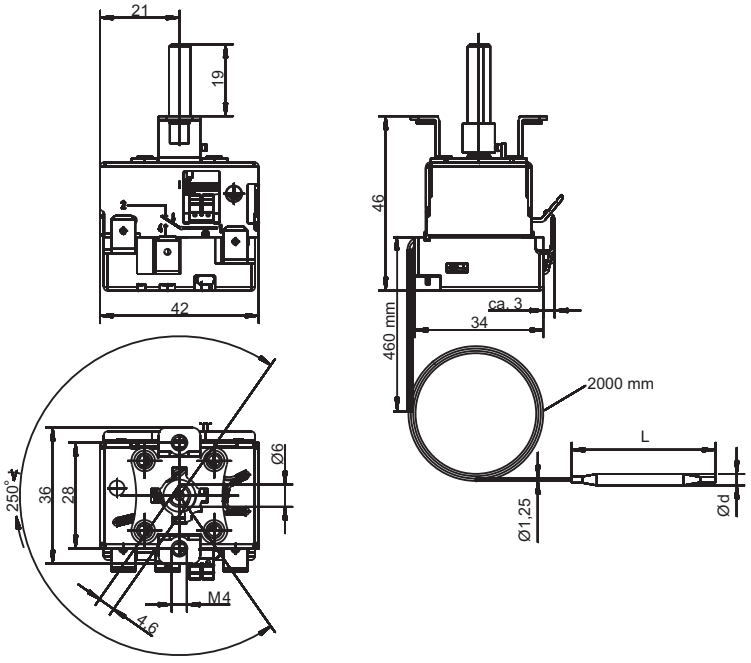

Part no.	Type	Control range °C	Capillary mm	Switching differential	Probe ∅ (d) × L
60003218	602030/01	+20 to 90	2,000	Approx. 2 K	6 × 132 mm
60003280		+20 to 90		Approx. 5 K	6 x 79 mm
60003219		+0 to 120		Approx. 3 K	6 x 87 mm
60003220		+0 to 200		Approx. 5 K	6 × 78 mm
60003221		+50 to 300		Approx. 6 K	6 x 66 mm

Type 602030/02

- Temperature monitor
- Compensated ambient temperature (standard)
- Max. switching capacity 16 A, 400 V
- Operating life at least 250,000 switching cycles
- Switching point deviation (drift) during the entire operating life of up to ± 5 %

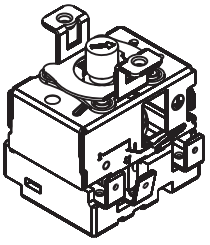

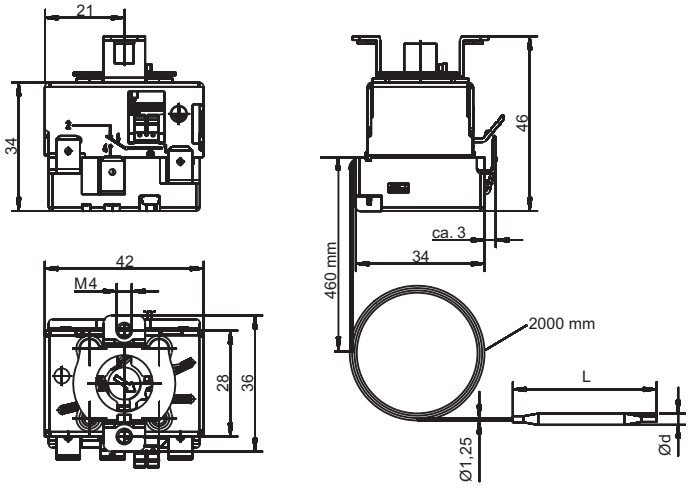

Part no.	Type	Control range °C	Capillary mm	Switching differential	Probe ∅ (d) × L
60003222	602030/02	+20 to 90	2,000	Approx. 2 K	6 × 132 mm
60003281		+20 to 90		Approx. 5 K	6 x 79 mm
60003223		+0 to 120		Approx. 3 K	6 x 87 mm
60003224		+0 to 200		Approx. 5 K	6 × 78 mm
60003225		+50 to 300		Approx. 6 K	6 x 66 mm

JUMO GmbH & Co. KG
Delivery address: Mackenrodtstraße 14
36039 Fulda, Germany
Postal address: 36035 Fulda, Germany
Phone: +49 661 6003-0
Fax: +49 661 6003-607
E-mail: mail@jumo.net
Internet: www.jumo.net

JUMO Instrument Co. Ltd.
JUMO House
Temple Bank, Riverway
Harlow, Essex CM20 2DY, UK
Phone: +44 1279 635533
Fax: +44 1279 635262
E-mail: sales@jumo.co.uk
Internet: www.jumo.co.uk

JUMO Process Control, Inc.
6733 Myers Road
East Syracuse, NY 13057, USA
Phone: 315-437-5866
1-800-554-5866
Fax: 315-437-5860
E-mail: info.us@jumo.net
Internet: www.jumousa.com

Devices in stock

Dimensions

Type 602031/21

- Safety temperature monitor
- Compensated ambient temperature (standard)
- Max. switching capacity 16 A, 400 V

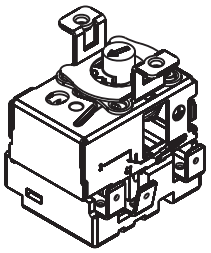

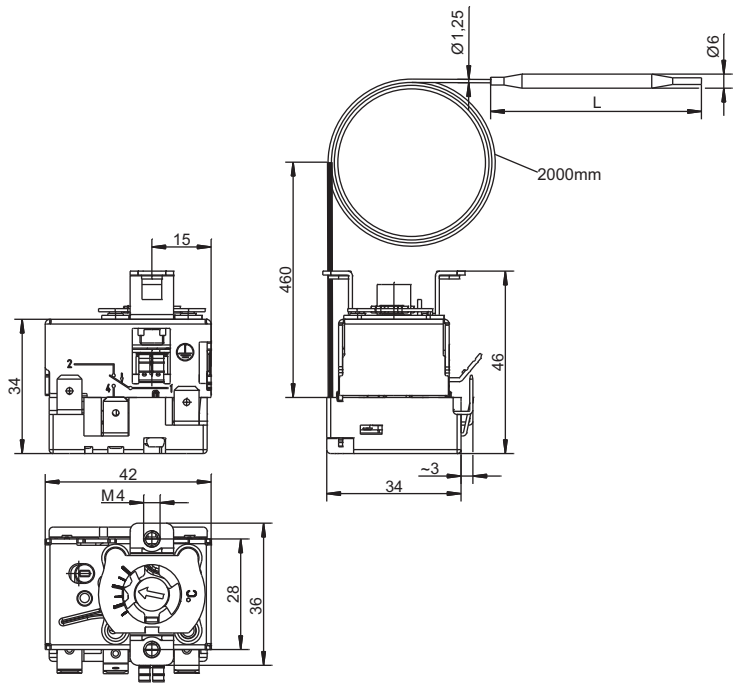

Part no.	Type	Control range °C	Capillary mm	Switching differential	Probe ∅ (d) × L
60003226	602031/21	+70 to 130	2,000	Approx. 10 K	6 x 60 mm

Type 602031/80

- Safety temperature limiter
- Compensated ambient temperature (standard)
- Max. switching capacity 16 A, 400 V

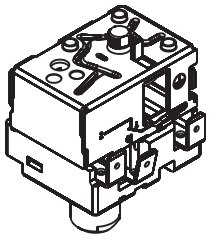

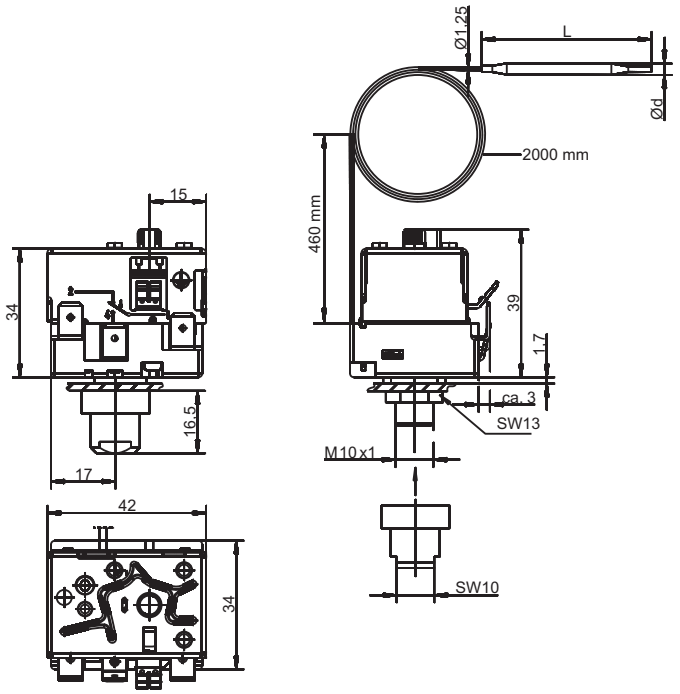

Part no.	Type	Switching point °C	Capillary mm	Unlocking difference	Probe ∅ (d) × L
60002994	602031/80	+100	2,000	Approx. 10 K	6 x 72 mm

JUMO GmbH & Co. KG
Delivery address: Mackenrodtstraße 14
36039 Fulda, Germany
Postal address: 36035 Fulda, Germany
Phone: +49 661 6003-0
Fax: +49 661 6003-607
E-mail: mail@jumo.net
Internet: www.jumo.net

JUMO Instrument Co. Ltd.
JUMO House
Temple Bank, Riverway
Harlow, Essex CM20 2DY, UK
Phone: +44 1279 635533
Fax: +44 1279 635262
E-mail: sales@jumo.co.uk
Internet: www.jumo.co.uk

JUMO Process Control, Inc.
6733 Myers Road
East Syracuse, NY 13057, USA
Phone: 315-437-5866
1-800-554-5866
Fax: 315-437-5860
E-mail: info.us@jumo.net
Internet: www.jumousa.com

Devices in stock

Dimensions

Type 602031/81

- Safety temperature limiter
- Compensated ambient temperature (standard)
- Max. switching capacity 16 A, 400 V

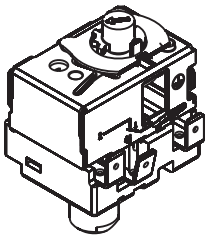

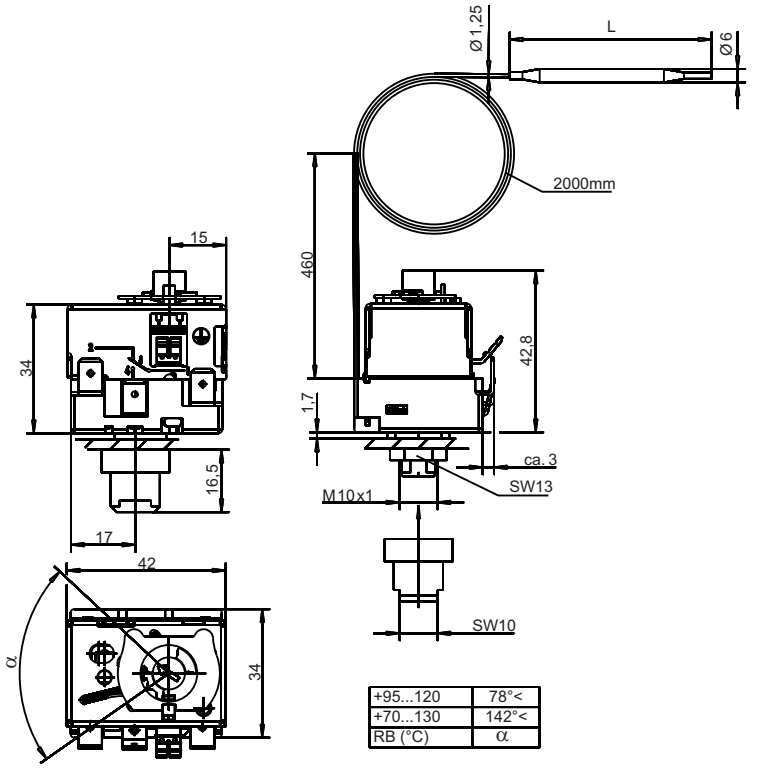

Part no.	Type	Control range °C	Capillary mm	Unlocking difference	Probe ∅ (d) × L
60002995	602031/81	+95 to 120	2,000	Approx. 10 K	6 x 72 mm
60003136		+70 to 130			6 x 60 mm

Type 602031/81

- Safety temperature limiter
- Compensated ambient temperature (standard)
- Max. switching capacity 16 A, 400 V
- With extra code 749: 250°.∠

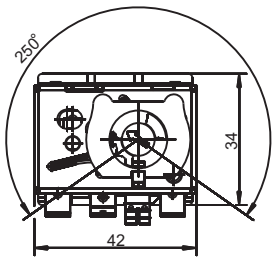

Part no.	Type	Control range °C	Capillary mm	Unlocking difference	Probe ∅ (d) × L
60003291	602031/81	+20 to 150	2,000	In the upper third approx. 15 K At the scale beginning approx. 30 K	6 x 60 mm
60003292		+50 to 300		In the upper third approx. 25 K At the scale beginning approx. 45 K	6 x 85 mm

JUMO GmbH & Co. KG
Delivery address: Mackenrodtstraße 14
36039 Fulda, Germany
Postal address: 36035 Fulda, Germany
Phone: +49 661 6003-0
Fax: +49 661 6003-607
E-mail: mail@jumo.net
Internet: www.jumo.net

JUMO Instrument Co. Ltd.
JUMO House
Temple Bank, Riverway
Harlow, Essex CM20 2DY, UK
Phone: +44 1279 635533
Fax: +44 1279 635262
E-mail: sales@jumo.co.uk
Internet: www.jumo.co.uk

JUMO Process Control, Inc.
6733 Myers Road
East Syracuse, NY 13057, USA
Phone: 315-437-5866
1-800-554-5866
Fax: 315-437-5860
E-mail: info.us@jumo.net
Internet: www.jumousa.com

Order details

Panel-mounted thermostat JUMO heatTHERM type 602030 and 602031

Minimum purchase order 500 pieces

Order code			(1)	Basic type		
		602030		Panel-mounted thermostat JUMO heatTHERM with single-pole snap-action switch (TR/TW)		
		602031		Panel-mounted thermostat JUMO heatTHERM with single-pole snap-action switch (STW/STB)		
			(2)	**Basic type extensions**		
x		01		Temperature controller (TR)	With changeover contact	
x		02		Temperature monitor (TW)	With changeover contact	
	x	20		Safety temperature monitor (STW)	Permanently set with change-over contact	
	x	21		Safety temperature monitor (STW)	Adjustable with changeover contact	
	x	80		Safety temperature limiter (STB)	Permanently set with changeover contact and restart lock	
	x	81		Safety temperature limiter (STB)	Adjustable with changeover contact and restart lock	
			(3)	**Control range / limit value range °C**	Max. allowable probe temperature °C	
x	x	000		With permanently set switching point		
x		026		0 to +120	145	
x		028		0 to +200	230	
x		041		+20 to +90	115	
x		064		+50 to +300 (temperature probe made of CrNi)	345	
	x	043		+20 to +150 (only with extra code 749)	180	
	x	640		+50 to +300 (temperature probe made of CrNi, only with extra code 749)	345	
	x	666		+95 to +120	145	
	x	671		+70 to +130	155	
				Further control ranges / limit value ranges up to 350 °C upon request (up to +500 °C without approval)		
			(4)	**Limit value STW/STB permanently set °C**	Max. allowable probe temperature °C	Switching point tolerance
	x	000		With adjustable limit value		
	x	095		+95	145	+0/-5K
	x	100		+100	145	+0/-5K
	x	110		+110	145	+0/-5K
				Further limit values up to 350 °C upon request (up to +500 °C without approval)		
			(5)	**Switching differential %**		
	x	00		No specifications for STB		
x		25		2.5		
x	x	70		7		
			(6)	**Capillary length mm**		
x	x	2000		2,000		
x	x			Special length upon request (maximum length 5,000 mm), specifications in plain text - 1,000 mm steps		
			(7)	**Capillary material**		
x	x	40		Cu (copper) Ø 1.25 mm		

JUMO GmbH & Co. KG
Delivery address: Mackenrodtstraße 14
36039 Fulda, Germany
Postal address: 36035 Fulda, Germany
Phone: +49 661 6003-0
Fax: +49 661 6003-607
E-mail: mail@jumo.net
Internet: www.jumo.net

JUMO Instrument Co. Ltd.
JUMO House
Temple Bank, Riverway
Harlow, Essex CM20 2DY, UK
Phone: +44 1279 635533
Fax: +44 1279 635262
E-mail: sales@jumo.co.uk
Internet: www.jumo.co.uk

JUMO Process Control, Inc.
6733 Myers Road
East Syracuse, NY 13057, USA
Phone: 315-437-5866
1-800-554-5866
Fax: 315-437-5860
E-mail: info.us@jumo.net
Internet: www.jumousa.com

Order details

Panel-mounted thermostat JUMO heatTHERM type 602030 and 602031

Order code

			(8)	**Process connection (PC)**
x	x	10		Plain cylindrical probe 
			(9)	**Diameter "d" (probe diameter) mm**
x	x	4		4
x	x	6		6
			(10)	**Temperature probe material**
x	x	40		Cu (copper)
x	x	20		CrNi (stainless steel 1.4571)
			(11)	**Capillary insulation**
x	x	13		PVC hose, black
			(12)	**Insulation length mm** (from case)
x	x	460		460
x	x			Special length upon request (maximum length 700 mm)
			(13)	**Extra codes**
x	x	000		Without extra code
x	x	702		Snap-action switch, gold-plated
x	x	742		Straight plug
x	x	749		Setting range with 250 angular degrees (only STB)

X = selection option for the basic type

Special versions upon request! The minimum purchase quantity for special versions is 500 pieces.

Order code

(1)		**(2)**		**(3)**		**(4)**		**(5)**		**(6)**		**(7)**		**(8)**		**(9)**		**(10)**		**(11)**		**(12)**		**(13)**	
602031	/		-		-		-		-		-		-		-		-		-		-		/		, ...

Order example

602031	/	80	-	000	-	110	-	25	-	2000	-	40	-	10	-	6	-	40	-	13	-	460	/	000[a]	, ...

[a] List extra codes in sequence, separated by commas.

JUMO GmbH & Co. KG
Delivery address: Mackenrodtstraße 14
36039 Fulda, Germany
Postal address: 36035 Fulda, Germany
Phone: +49 661 6003-0
Fax: +49 661 6003-607
E-mail: mail@jumo.net
Internet: www.jumo.net

JUMO Instrument Co. Ltd.
JUMO House
Temple Bank, Riverway
Harlow, Essex CM20 2DY, UK
Phone: +44 1279 635533
Fax: +44 1279 635262
E-mail: sales@jumo.co.uk
Internet: www.jumo.co.uk

JUMO Process Control, Inc.
6733 Myers Road
East Syracuse, NY 13057, USA
Phone: 315-437-5866
1-800-554-5866
Fax: 315-437-5860
E-mail: info.us@jumo.net
Internet: www.jumousa.com

Accessories

(according to product group 606710 and 606715)

Thermowell-set (according to product group 606710)	Thermowell with sealing collar		Clamp for strain relief	Plate for surface-mounted thermostat	Screw for surface-mounted thermostat
Suitable for type 602030 and 602031	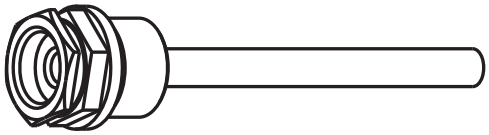		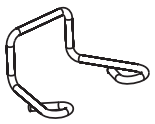	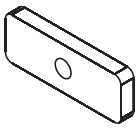	
Part no.	Type	Abbreviation	Connection	Insertion length EL in mm	Material
60003177	Screw-in thermowell with sealing collar	28	G 1/2	100	Brass/ nickel-plated
60003203				150	
60003171				200	
60003172				100	Stainless steel / 1.4571
60003205				150	
60003173				200	

Mounting set for mounting rail DIN EN 60715 TH 35-7.5 (according to product group 606710)				
Part no.	Type			
00511794	Adapter set, mounting rail JUMO heatTHERM/ EM	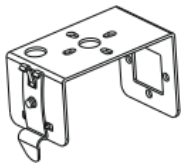	 2 screws M3 × 4	 2 screws M4 × 5

Setpoint adjuster for type 602030/01 (according to product group 606715)						
Part no.	Type	Control range °C	W 8			
60003091	W 8	+20 to +90	 Rotary knob 07	 Panel 23	 Adjustable stop 16	 2 screws M4 x 8
60003227		0 to +120				
60003095		0 to +200				
60003098		+50 to +300				