E11976

Fixing strap for clean-line cylinders

FIXING STRAP CLEAN-LINE CYL

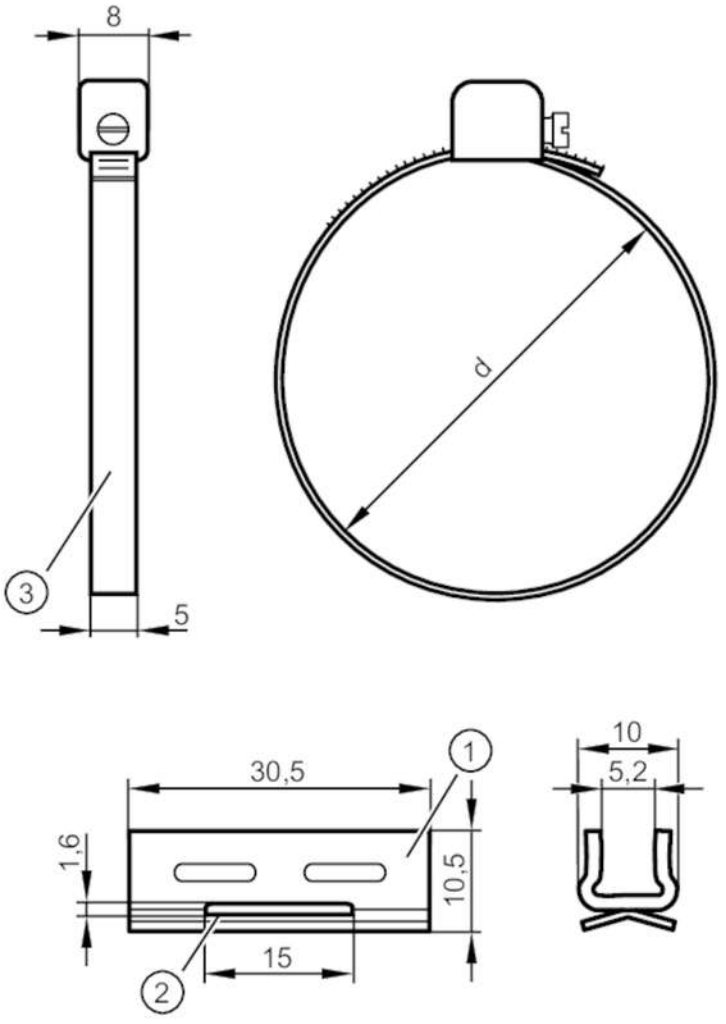

1 Adapter
2 slot for fixing strap
3 Fixing strap for clean-line cylinders

Application		
Design		for types MKT
Mechanical data		
Weight	[g]	15.5
Dimensions	[mm]	Ø 20
Materials		Adapter: stainless steel (1.4301 / 304); fixing strap: stainless steel (1.4305 / 303)
Piston diameter	[mm]	20...25
Clamping range	[mm]	18...29
Accessories		
Items supplied		Adapter: 1x, for types, MKT
		Fixing strap for clean-line cylinders: 1x
Remarks		
Pack quantity		1 pcs.