TECHNICAL DATASHEET

LYTE DIN Rail Power Supply

DRL-75W series / DRL-☐V75W1AZ



LYTE

Highlights & Features

- Universal AC input voltage range
- Built-in constant current circuit for reactive loads
- Up to 90% efficiency
- Full power from -10°C to +50°C @ 230 Vac with -30°C Cold Start
- Compliance to SEMI F47 @ 200 Vac
- Limited Power Source (LPS) certified (DRL-24V75W1AZ & DRL-48V75W1AZ)

Safety Standards

CB Certified for worldwide use

Model Number: DRL-☐V75W1AZ
Unit Weight: 0.22 kg (0.49 lb)
Dimensions (L x W x D): 123.6 x 27 x 102 mm (4.87 x 1.06 x 4.02 inch)

General Description

Delta's LYTE DIN rail power supply series is designed for price sensitive users who require basic yet reliable power output for general industrial applications. The convection-cooled LYTE series operates between 20°C to +70°C, providing 100% output power from -10°C to +50°C at 230Vac. The overcurrent protection is designed to operate in constant current mode, which makes the LYTE series suitable for inductive and capacitive load applications. The product is certified according to safety standards IEC 60950-1 & IEC/EN/UL 62368-1. Electromagnetic radiated and conducted emissions are certified according to EN 55032, Class B; and, the product is RoHS compliant for environmental protection.

Model Information

LYTE DIN Rail Power Supply

Model Number	Input Voltage Range	Rated Output Voltage	Rated Output Current
DRL-12V75W1AZ	85-264 Vac	12 Vdc	6.25 A
DRL-24V75W1AZ		24 Vdc	3.125 A
DRL-48V75W1AZ		48 Vdc	1.57 A

Model Numbering

DR	L –	☐V	75W	1	A	Z
DIN Rail	Product Type L – LYTE Series	Output Voltage 12 – 12 V 24 – 24 V 48 – 48 V	Output Power	Single Phase	Delta Standard	Z – Plastic case without DC OK relay contact & without coating

All parameters are specified at 25°C ambient and AC input unless otherwise indicated.
www.DeltaPSU.com (June 2021, Rev. 04)

LYTE DIN Rail Power Supply
DRL-75W series / DRL-□V75W1AZ

Specifications

Model Number	DRL-12V75W1AZ	DRL-24V75W1AZ	DRL-48V75W1AZ

Input Ratings / Characteristics

Nominal Input Voltage	100-240 Vac		
Input Voltage Range	85-264 Vac		
Nominal Input Frequency	50-60 Hz		
Input Frequency Range	47-63 Hz		
Input Current	1.4 A typ. @ 115 Vac, 0.9 A typ. @ 230 Vac		
Efficiency at 100% Load	87.5% typ. @ 230 Vac	89% typ. @ 230 Vac	90% typ. @ 230 Vac
Max Inrush Current (Cold Start)	50 A typ. @ 230 Vac		
Leakage Current	< 1 mA @ 240 Vac		

Output Ratings / Characteristics[*1]

Nominal Output Voltage	12 Vdc	24 Vdc	48 Vdc
Factory Set Point Tolerance	12 Vdc ± 2%	24 Vdc ± 2%	48 Vdc ± 1%
Output Voltage Adjustment Range	10.8-13.2 Vdc	21.6-26 Vdc	43.2-52.8 Vdc
Output Current	6.2 5A	3.125 A	1.57 A
Output Power	75 W	75 W	75.36 W
Line Regulation	< 0.5% (@ 85-264 Vac, 100% load)		
Load Regulation	< 1% (0-100% load)		
PARD[*2] (20 MHz)	< 120 mVpp @ > -10°C to +70°C < 360 mVpp @ ≤ -10°C to -30°C	< 120 mVpp @ > -10°C to +70°C < 360 mVpp @ ≤ -10°C to -30°C	< 240 mVpp @ > -10°C to +70°C < 480 mVpp @ ≤ -10°C to -30°C
Rise Time	30 ms typ. @ nominal input (100% load)		
Start-up Time	1200 ms typ. @ 115 Vac (100% load) 1000 ms typ. @ 230 Vac (100% load)		
Hold-up Time	16 ms typ. @ 115 Vac (100% load) 60 ms typ. @ 230 Vac (100% load)		
Dynamic Response (Overshoot & Undershoot O/P Voltage)	± 10% @ 115 Vac & 230 Vac input, 0-50%, 50-100% load (Slew Rate: 2.5 A/μS, 50% duty cycle @ 100 Hz & 1 kHz)		
Start-up with Capacitive Loads	5,000 μF Max	5,000 μF Max	4,000 μF Max

*1 For power de-rating from -10°C to -20°C, and 40°C to 70°C @ 115 Vac & 50°C to 70°C @ 230 Vac, and Vin < 100 Vac, see power de-rating on page 3.
*2 PARD is measured with an AC coupling mode, 5cm wires, and in parallel to end terminal with 0.1 μF ceramic capacitor & 47 μF electrolytic capacitor. PSU need to burn in around 5 minutes when AMB ≤ 0°C

LYTE DIN Rail Power Supply

DRL-75W series / DRL-□V75W1AZ

Model Number	DRL-12V75W1AZ	DRL-24V75W1AZ	DRL-48V75W1AZ

Mechanical

Case Cover / Chassis		Plastic
Dimensions (L x W x D)		123.6 x 27 x 102 mm (4.87 x 1.06 x 4.02 inch)
Unit Weight		0.22 kg (0.49 lb)
Indicator		Green LED (DC OK)
Cooling System		Convection
Terminal	Input	3 Pins (Rated 300 V / 16 A)
	Output	4 Pins (Rated 300 V / 16 A)
Wire	Input	AWG 18-12
	Output	AWG 22-12
Mounting Rail		Standard TS35 DIN Rail in accordance with EN 60715
Noise (1 Meter from power supply)		Sound Pressure Level (SPL) < 25 dBA

Environment

Surrounding Air Temperature	Operating	-20°C to +70°C (-30°C Cold Start)
	Storage	-40°C to +85°C
Power De-rating	Temperature	-10°C to -20°C de-rate power by 1% / °C > 40°C de-rate power by 1.67% / °C @ 115 Vac > 50°C de-rate power by 2.5% / °C @ 230 Vac
	Input Voltage	< 100 Vac de-rate power by 1.33% / Vac
Operating Humidity		5 to 95% RH (Non-Condensing)
Operating Altitude		0 to 5,000 Meters (16,400 ft.)
Shock Test	Non-Operating	IEC 60068-2-27, Half Sine Wave: 50 G for duration of 11 ms; 3 times per direction, 9 times in total
	Operating	IEC 60068-2-27, Half Sine Wave: 10 G for duration of 11 ms; 1 time in X axis
Vibration	Non-Operating	IEC 60068-2-6, Random: 5 Hz to 500 Hz; 2.09 G_{rms}; 20 min per axis for all X, Y, Z directions
	Operating	IEC 60068-2-6, Sine Wave: 10 Hz to 500 Hz @ 19.6 m/s² (2 G peak); displacement of 0.3 5mm; 10 min per cycle, 60 min for X direction
Over Voltage Category		II
Pollution Degree		2

LYTE DIN Rail Power Supply

DRL-75W series / DRL-□V75W1AZ

Model Number	DRL-12V75W1AZ	DRL-24V75W1AZ	DRL-48V75W1AZ

Protections

Overvoltage	< 18 V, SELV Output, Latch Mode	< 33.6 V, SELV Output, Latch Mode	< 62.4 V, SELV Output, Latch Mode
Overload / Overcurrent	105 - 133% of rated load current, Constant current limit, Auto-recovery	105 - 133% of rated load current, Constant current limit, Auto-recovery	105 - 133% of rated load current, Constant current limit, Auto-recovery
Over Temperature	Latch Mode		
Short Circuit	Hiccup Mode, Non-Latching (Auto-Recovery when the fault is removed)		
Internal Fuse at L pin	F 5 A H		
Degree of Protection	IP20		
Protection Against Shock	Class I with PE*3 connection		

*3 PE: Primary Earth

Reliability Data

MTBF	Telcordia SR-332	> 700,000 hrs	I/P: 100 Vac, O/P: 100% load, Ta: 25°C
Expected Cap Life Time		10 years (115 Vac & 230 Vac, 50% load @ 40°C)	

Safety Standards / Directives

Electrical Safety	CB scheme	IEC 62368-1, IEC 60950-1, IEC 61010-1
	TUV Bauart	EN 62368-1
	UL/cUL and cTUVus	UL 62368-1
	CCC	GB4943.1
	BSMI	CNS14336-1
	EAC	TP TC 004/2011
	KC	K 60950-1
Limited Power Source (LPS)	CB scheme	IEC 62368-1 (For DRL-24V75W1AZ & DRL-48V75W1AZ)
CE		In conformance with EMC Directive 2014/30/EU and Low Voltage Directive 2014/35/EU
UKCA		In conformance with Electrical Equipment (Safety) Regulations 2016 and Electromagnetic Compatibility Regulations 2016
Galvanic Isolation	Input to Output	3.0 KVac
	Input to Ground	2.0 KVac
	Output to Ground	0.5 KVac

LYTE DIN Rail Power Supply

DRL-75W series / DRL-□V75W1AZ

Model Number	DRL-12V75W1AZ	DRL-24V75W1AZ	DRL-48V75W1AZ

EMC

Emissions (CE & RE)		CISPR 32, EN/BS EN 55032, EN/BS EN 55011, AS/NZS CISPR32: Class B; GB9254.1 Compliance with: EN/BS EN 61000-6-3, EN/BS EN 61000-6-4		
Component Power Supply for General Use		EN/BS EN 61204-3		
Immunity		EN/BS EN 55035, EN/BS EN 55024 Compliance with: EN/BS EN 61000-6-1, EN/BS EN 61000-6-2		
Electrostatic Discharge	IEC 61000-4-2	Level 4 Criteria A[1] Air Discharge: 15 kV Contact Discharge: 8 kV		
Radiated Field	IEC 61000-4-3	Level 2 Criteria A[1] 80 MHz – 1 GHz, 3 V/M with 1 kHz tone / 80% modulation		
Electrical Fast Transient / Burst	IEC 61000-4-4	Level 3 Criteria A[1] 2 kV		
Surge	IEC 61000-4-5	Level 4 Criteria A[1] Common Mode[3]: 4 kV Differential Mode[4]: 2 kV		
Conducted	IEC 61000-4-6	Level 2 Criteria A[1] 150 kHz – 80 MHz, 3 Vrms		
Power Frequency Magnetic Fields	IEC 61000-4-8	Level 2 Criteria A[1] 3 A/m		
Voltage Dips and Interruptions	IEC 61000-4-11	0% of 115 Vac, 12 ms 40% of 115 Vac, 200 ms 70% of 115 Vac, 500 ms 0% of 115 Vac, 5000 ms 0% of 240 Vac, 12 ms 40% of 240 Vac, 200 ms 70% of 240 Vac, 500 ms 0% of 240 Vac, 5000 ms	Criteria A[1] Criteria B[2] Criteria A[1] Criteria B[2] Criteria A[1] Criteria A[1] Criteria A[1] Criteria B[2]	
Harmonic Current Emission		IEC/EN/BS EN 61000-3-2, Class A; GB17625.1		
Voltage Fluctuation and Flicker		IEC/EN/BS EN 61000-3-3		
Voltage Sag Immunity SEMI F47 – 0706		80% of 200 Vac 70% of 200 Vac 50% of 200 Vac	160 Vac, 1000 ms 140 Vac, 500 ms 100 Vac, 200 ms	Criteria A[1] Criteria A[1] Criteria A[1]

1) Criteria A: Normal performance within the specification limits
2) Criteria B: Temporary degradation or loss of function which is self-recoverable
3) Asymmetrical: Common mode (Line to earth)
4) Symmetrical: Differential mode (Line to line)

LYTE DIN Rail Power Supply

DRL-75W series / DRL-☐V75W1AZ

Block Diagram

DRL-☐V75W1AZ

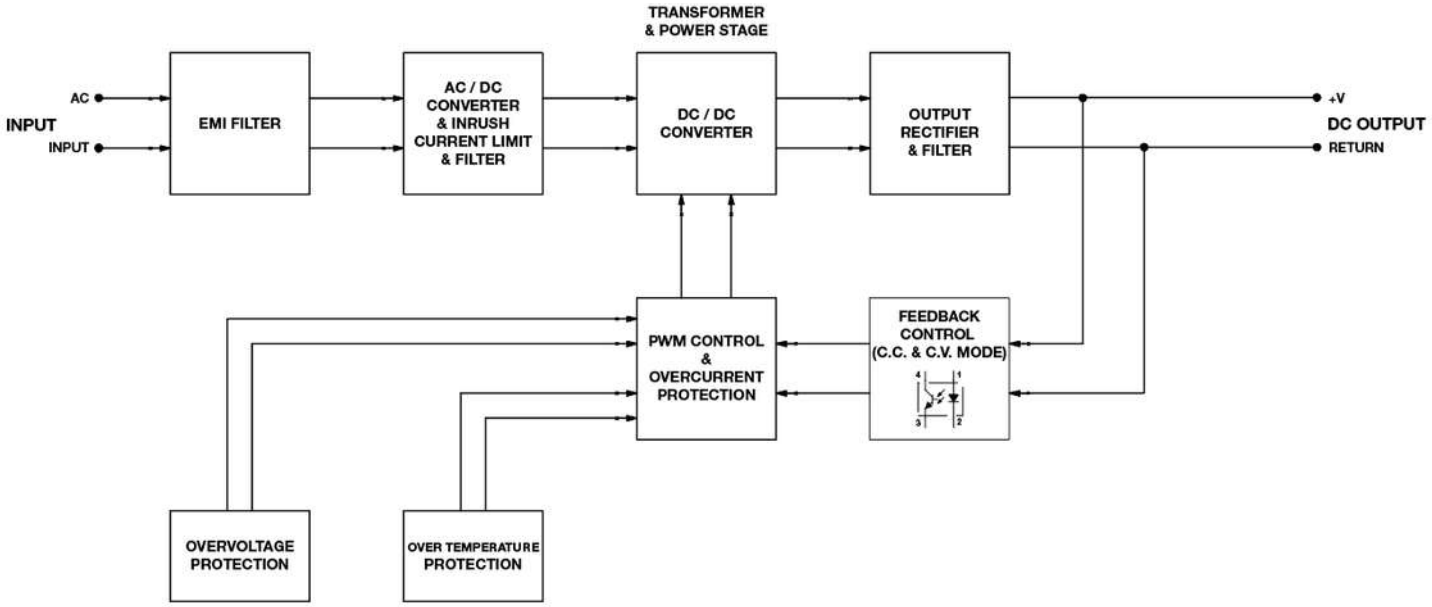

LYTE DIN Rail Power Supply

DRL-75W series / DRL-□V75W1AZ

Device Description

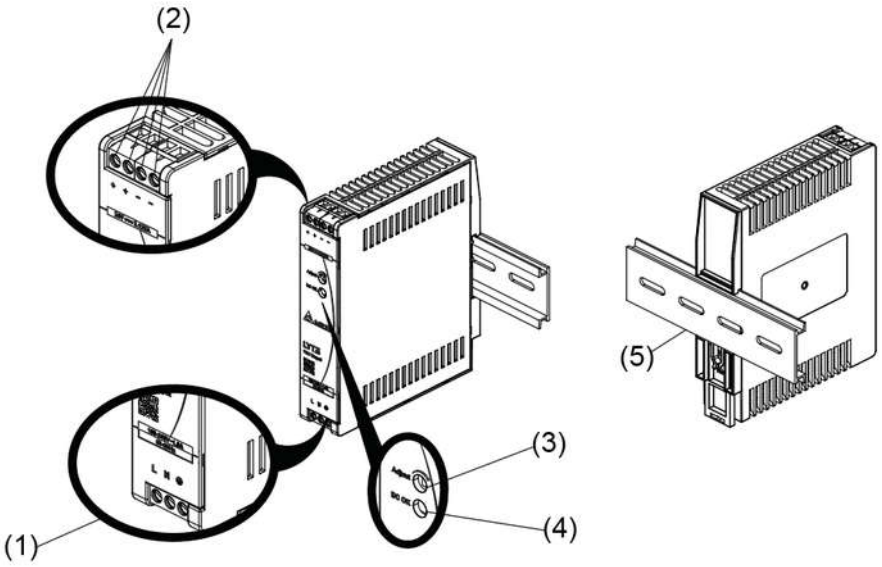

1) Input terminal block connector
2) Output terminal block connector
3) DC voltage adjustment potentiometer
4) DC OK LED (Green)
5) Universal mounting rail system

Dimensions

L x W x D: 123.6 x 27 x 102 mm (4.87 x 1.06 x 4.02 inch)

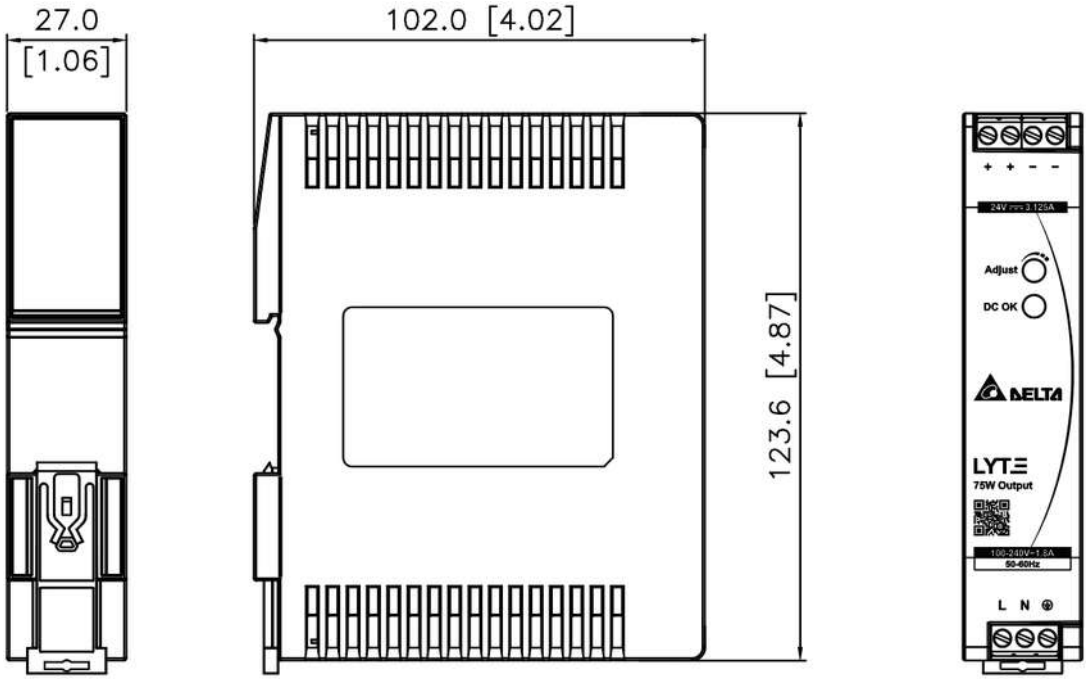

All parameters are specified at 25°C ambient and AC input unless otherwise indicated.
www.DeltaPSU.com (June 2021, Rev. 04)

LYTE DIN Rail Power Supply

DRL-75W series / DRL-□V75W1AZ

Engineering Data

Output Load De-rating VS Surrounding Air Temperature

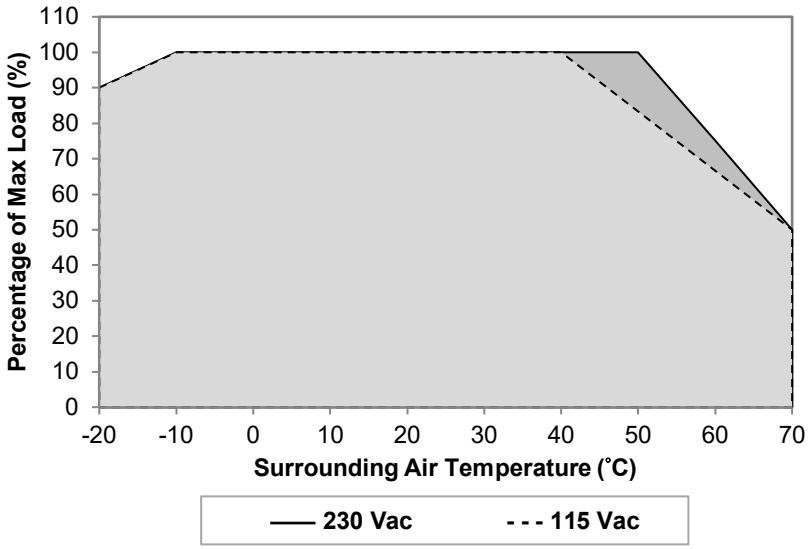

Fig. 1 **De-rating for Vertical Mounting Orientation**
-10°C to -20°C de-rate power by 1% / °C
> 40°C de-rate power by 1.67% / °C @ 115 Vac
> 50°C de-rate power by 2.5% / °C @ 230 Vac

Note

1. Power supply components may degrade, or be damaged, when the power supply is continuously used outside the shaded region, refer to the graph shown in Fig. 1.
2. If the output capacity is not reduced when the surrounding air temperature > 40°C (115 Vac) or > 50°C (230 Vac), the device will run into Over Temperature Protection. When activated, power supply will latch off, until the surrounding air temperature is lowered or the load is reduced as far as necessary to keep the device in working condition, and require removal/re-application of input AC voltage in order to restart.
3. In order for the device to function in the manner intended, it is also necessary to keep a safety distance as recommended in the safety instructions while the device is in operation.
4. Depending on the surrounding air temperature and output load delivered by the power supply, the device can be very hot!
5. If the device has to be mounted in any other orientation, please contact **info@deltapsu.com** for more details.

Output Load De-rating VS Input Voltage

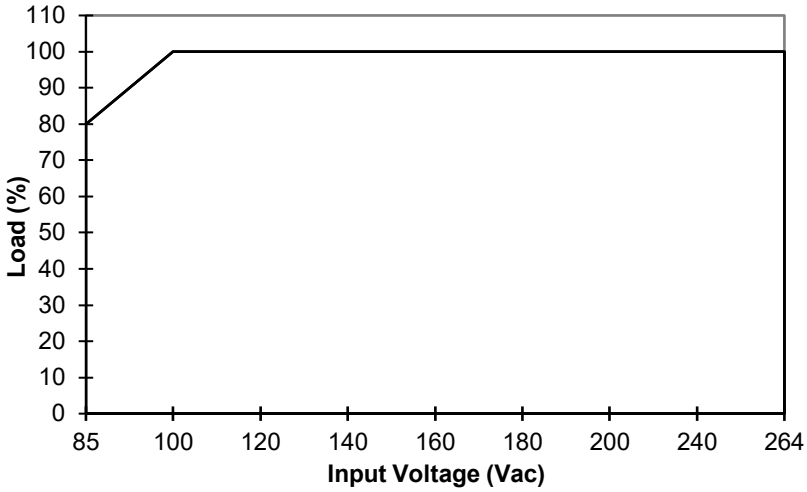

- No output power de-rating for the input voltage from 100 Vac to 264 Vac

LYTE DIN Rail Power Supply
DRL-75W series / DRL-☐V75W1AZ

Assembly & Installation

The power supply unit (PSU) can be mounted on 35 mm DIN rails in accordance with EN 60715. The device should be installed with input terminal block at the bottom.

Each device is delivered ready to install.

Mounting

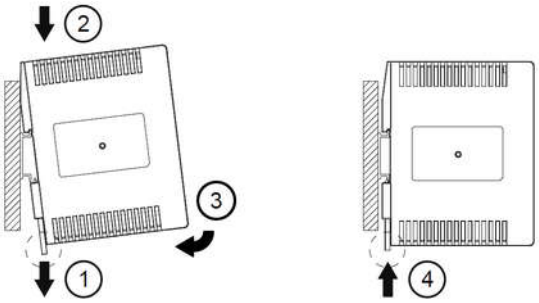

Fig. 2.1 Mounting

Snap on the DIN rail as shown in Fig. 2.1:
1. Pull the unit's DIN rail latch OUT.
2. Tilt the unit slightly upwards, hook the top end onto the DIN rail and push downwards until stopped.
3. Position the bottom front end against the DIN rail.
4. Push the unit's latch DIN rail IN to lock.

Dismounting

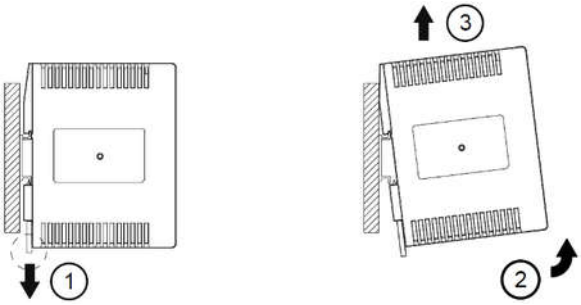

Fig. 2.2 Dismounting

To uninstall,
1. Pull the unit's DIN rail latch OUT.
2. Tilt the bottom part of the unit out.
3. Push the unit up and pull out from the DIN rail.

In accordance to EN 60950 / UL 60950 and EN 62368 / UL 62368, flexible cables require ferrules.
Use appropriate copper cables designed to sustain operating temperature of at least 60°C / 75°C or more to fulfill UL requirements.

Safety Instructions

■ **Vertical Mounting**

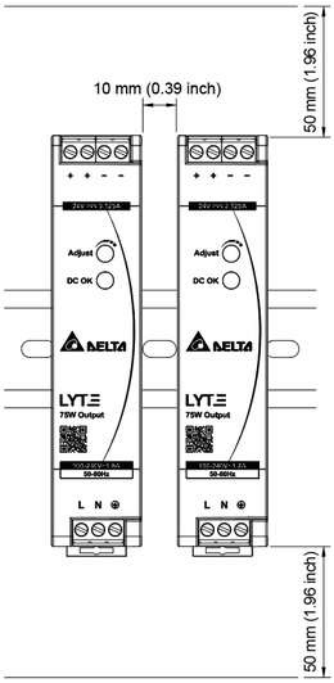

- ALWAYS switch mains of input power OFF before connecting and disconnecting the input voltage to the unit. If mains are not turned OFF, there is risk of explosion / severe damage.
- **To guarantee sufficient convection cooling, keep a distance of 50 mm (1.96 inch) above and below the device as well as a lateral distance of 10 mm (0.39 inch) to other units.**
- Note that the enclosure of the device can become very hot depending on the surrounding air temperature and load of the power supply. Risk of burns!
- The main power must be turned off before connecting or disconnecting wires to the terminals.
- DO NOT insert any objects into the unit.
- Hazardous voltages may be present for up to 5 minutes after the input mains voltage is disconnected. Do not touch the unit during this time.
- The power supplies are built in units and must be installed in a cabinet or room (condensation free environment and indoor location) that is relatively free of conductive contaminants.

LYTE DIN Rail Power Supply
DRL-75W series / DRL-□V75W1AZ

Functions

■ **Graph illustrating the Start-up Time, Rise Time, and Hold-up Time**

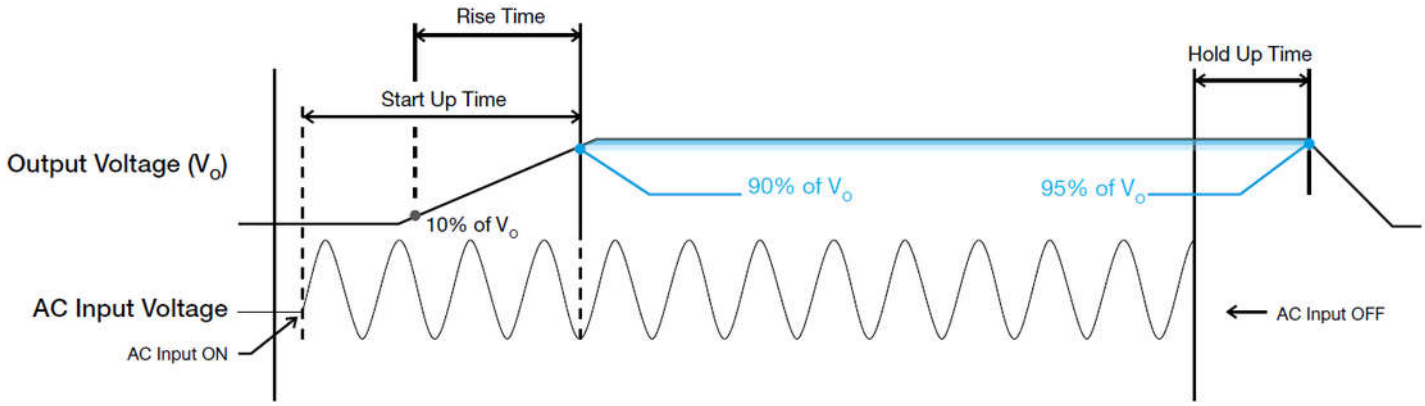

Start-up Time

The time required for the output voltage to reach 90% of its final steady state set value, after the input voltage is applied.

Rise Time

The time required for the output voltage to change from 10% to 90% of its final steady state set value.

Hold-up Time

Time between the collapse of the AC input voltage, and the output falling to 95% of its steady state set value.

Inrush Current

Inrush current is the peak, instantaneous, input current measured and, occurs when the input voltage is first applied. For AC input voltages, the maximum peak value of inrush current will occur during the first half cycle of the applied AC voltage. This peak value decreases exponentially during subsequent cycles of AC voltage.

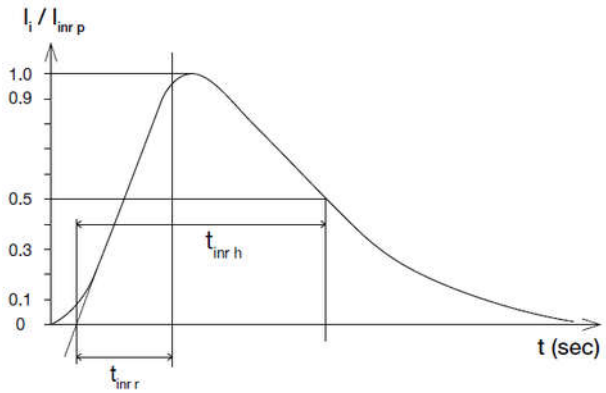

Dynamic Response

The power supply output voltage will remains within ±10% of its steady state value, when subjected to a dynamic load from 0% to 50% and 50% to 100% of its rated current.

■ **50% duty cycle / 5 Hz to 100 Hz**

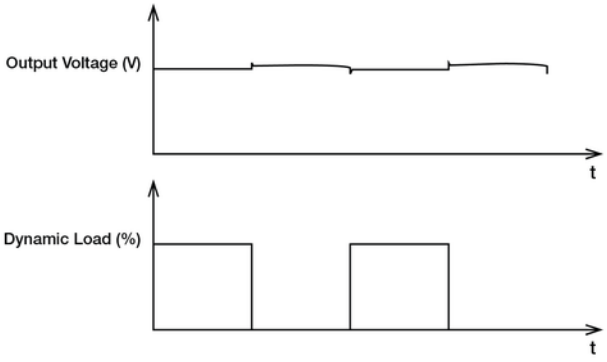

LYTE DIN Rail Power Supply
DRL-75W series / DRL-□V75W1AZ

Overload & Overcurrent Protections (Continuous Current)

The power supply's Overload (OLP) and Overcurrent (OCP) Protections will be activated when output current is 105~133% of I_O (Max load). Upon such an occurrence, the V_O (output voltage) will start to droop. Once the power supply has reached its maximum power limit, the protection will be activated; and, the power supply will operate in continuous current. The power supply will recover once the cause of OLP or OCP is removed, and I_O (output current) is back within the specified range.

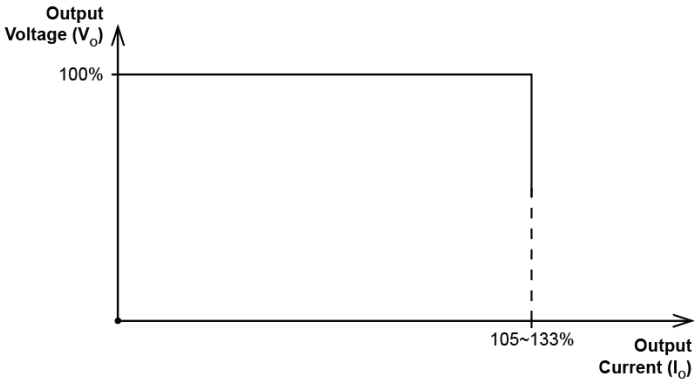

Short Circuit Protection (Auto-Recovery)

The power supply's output Short Circuit Protection function also provides protection against short circuits. When a short circuit is applied, the output current will operate in "Hiccup mode". The power supply will return to normal operation after the short circuit is removed.

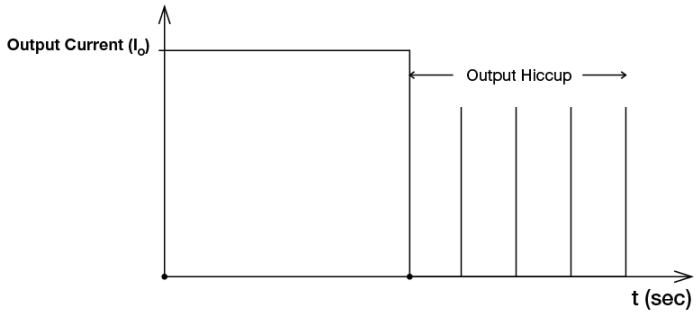

Overvoltage Protection (Latch Mode)

The power supply's overvoltage circuit will be activated when its internal feedback circuit fails. The output voltage shall not exceed its specifications as described in "Protections" section. Power supply will latch off, and require removal/re-application of input AC voltage in order to restart.

The power supply should be latch.

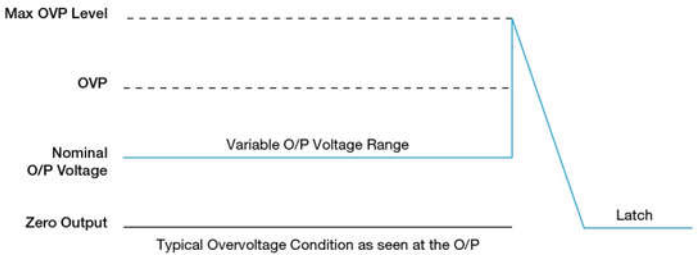

Over Temperature Protection (Latch Mode)

As described in load de-rating section, the power supply also has Over Temperature Protection (OTP). In the event of a higher operating temperature at 100% load; or, when the operating temperature is beyond what is recommended in the de-rating graph, the OTP circuit will be activated. When activated, power supply will latch off, until the surrounding air temperature drops to its normal operating temperature or the load is reduced as recommended in the de-rating graph. Removal/re-application of input AC voltage will then be required in order to restart.

Others

Attention

Delta provides all information in the datasheets on an “AS IS” basis and does not offer any kind of warranty through the information for using the product. In the event of any discrepancy between the information in the catalog and datasheets, the datasheets shall prevail (please refer to **www.DeltaPSU.com** for the latest datasheets information). Delta shall have no liability of indemnification for any claim or action arising from any error for the provided information in the datasheets. Customer shall take its responsibility for evaluation of using the product before placing an order with Delta.

Delta reserves the right to make changes to the information described in the datasheets without notice.

Manufacturer and Authorized Representatives Information

Manufacturer

Thailand
Delta Electronics (Thailand) PCL.
909 Pattana 1 Rd., Muang, Samutprakarn, 10280 Thailand

Taiwan
Delta Electronics, Inc.
3 Tungyuan Road, Chungli Industrial Zone, Taoyuan County 32063, Taiwan

Authorized Representatives

The Netherlands
Delta Greentech (Netherlands) B.V.
Zandsteen 15, 2132 MZ Hoofddorp, The Netherlands

United Kingdom
Delta Electronics Europe Limited
1 Redwood Court, Peel Park Campus,
East Kilbride, Glasgow, G74 5PF, United Kingdom