Capacitive Sensor

BCS Q40BBAA-GPC20C-EP02
BCS00TR

BALLUFF
sensors worldwide

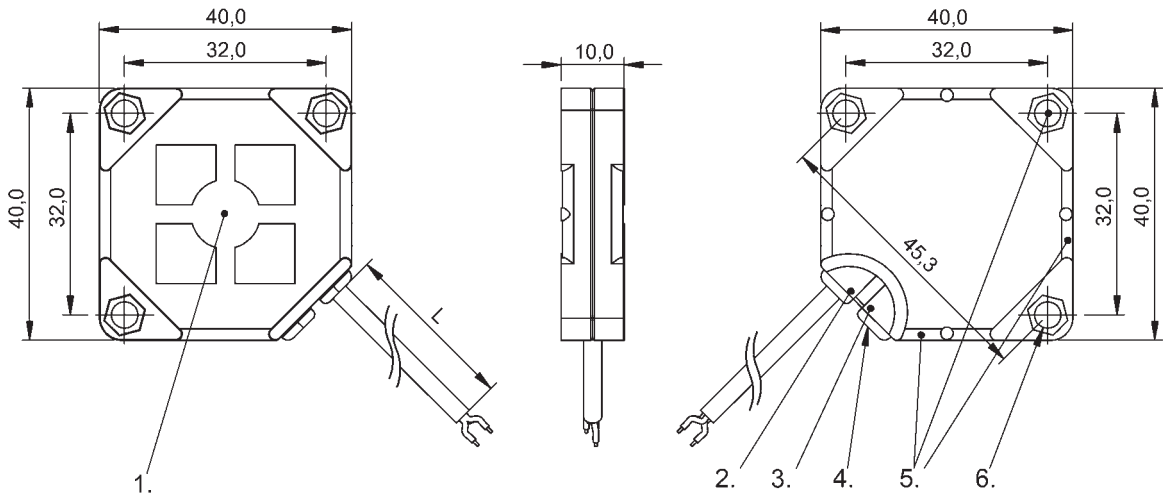

1) Active surface 2) Power indicator green 3) Function indicator yellow 4) Pot 5) Mounting: Cable connector 6) Mounting: Screw 3xM3

- **PNP/NPN**
- **Output programmable**
- **20.00 mm**
- **Flush (shielded)**
- **Cable, PUR, 2.00 m**
- **switching distance adjustable**

IND. CONT. EQ. 81U2
for use in the secondary of
a class 2 source of supply

IND. CONT. EQ.
81U2
for use in the secondary of
a class 2 source of supply

General attributes

Approvals / Conformity	CE cULus
Basic standard	IEC 60947-5-2
Enclosure Type per IEC 60529	IP67
Function indicator	Yes
Polarity reversal protected	Yes
Power indicator	Yes
Short circuit protected	Yes
Trademark	GLOBAL

Electrical attributes

Connection type	Cable
Eff. operating current Ie	100 mA
Eff. operating voltage Ue DC	24.0 V
Load capacitance max. (at Ue)	10.000 µF
Max. no-load cur. Io undamped	12.0 mA
No-load current Io damped max.	15.0 mA
Operating voltage UB max. DC [V]	30.0 V
Operating voltage UB min. DC [V]	10.0 V
Rated insulation voltage Ui	75 V DC
Ripple max. (% of Ue)	10 %
Sensitivity	switching distance adjustable
Switching freq. f max. (at Ue)	100 Hz
Switching function	Output programmable
Switching output	PNP/NPN
Voltage drop static max.	2.5 V

Mechanical attributes

Ambient temperature Ta max.	85 °C
Ambient temperature Ta min.	-5 °C
Cable diameter D max.	3.0 mm
Cable jacket material	PUR
Cable length L [m]	2.00 m
Conductor cross-section	0.14 mm²
Cover material	PBT
Depth	10.0 mm
Height (small side)	40.0 mm
Housing material	PBT
Mech. installation condition	Flush (shielded)
Number of conductors	3
Rated operating distance Sn [mm]	20.00 mm
Sensing face material	PBT
Storage temperature max.	+85 °C
Storage temperature min.	-25 °C
Width (long side)	40.0 mm
Working range Sa max. [mm]	20.00 mm
Working range Sa min. [mm]	1.00 mm

Additional text
The push-pull switching outputs must not be connected in parallel.

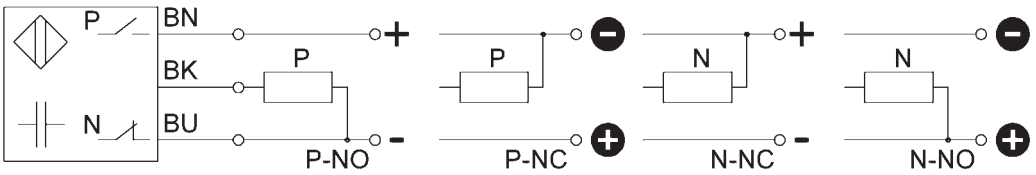
P
N
BN
BK
BU
P
P-NO
P
P-NC
N
N-NC
N
N-NO