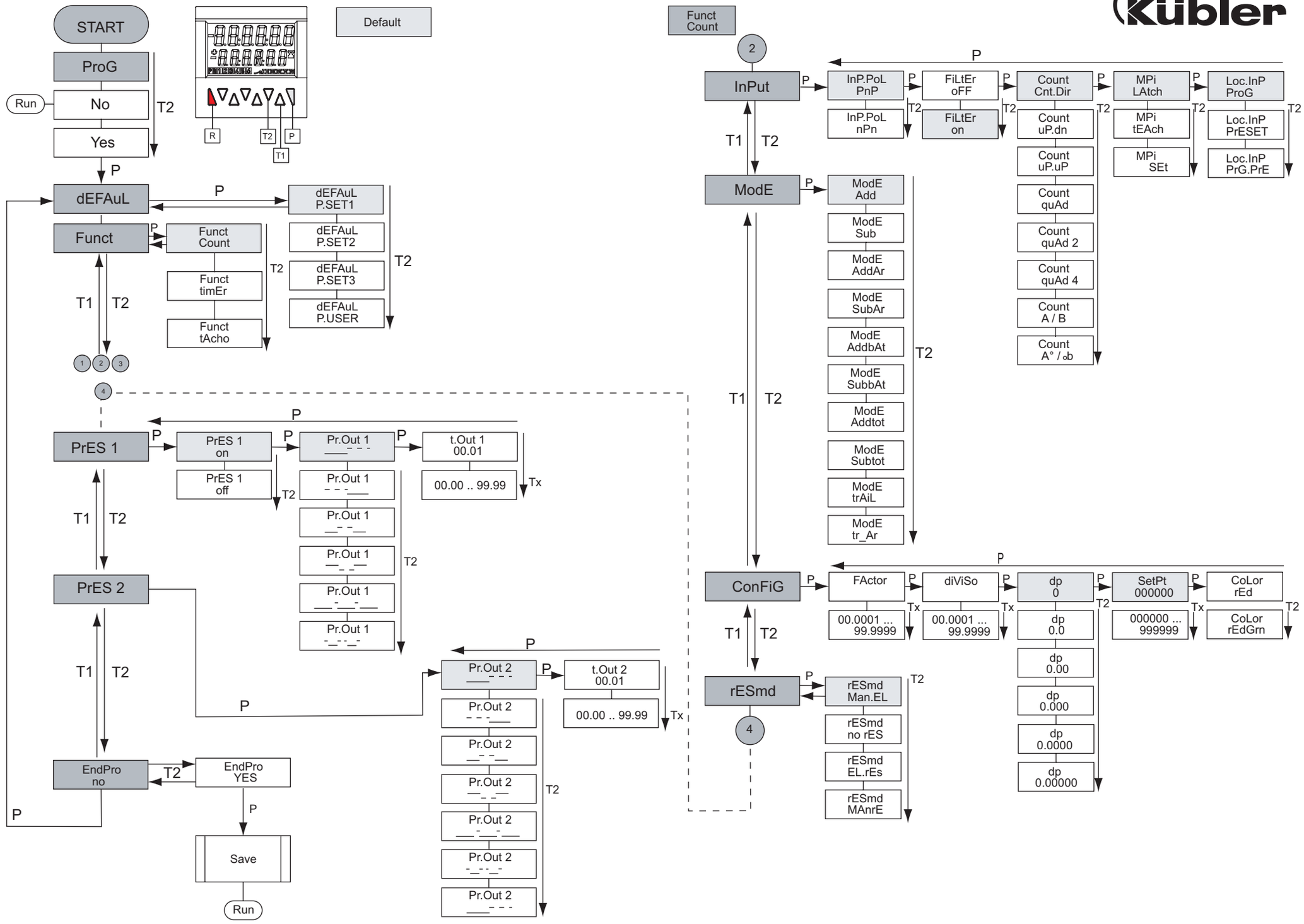
START
ProG
Run
No
T2
Yes
P
Default
R
T2
P
T1
dEFAuL
P
dEFAuL P.SET1
dEFAuL P.SET2
dEFAuL P.SET3
dEFAuL P.USER
Funct
Funct Count
Funct timEr
Funct tAcho
T1
T2
1
2
3
4
PrES 1
PrES 1 on
PrES 1 off
Pr.Out 1
t.Out 1 00.01
00.00 .. 99.99
Tx
PrES 2
EndPro no
EndPro YES
Save
Run
Pr.Out 2
t.Out 2 00.01
Funct Count
2
InPut
InP.PoL PnP
InP.PoL nPn
FiLtEr oFF
FiLtEr on
Count Cnt.Dir
Count uP.dn
Count uP.uP
Count quAd
Count quAd 2
Count quAd 4
Count A / B
Count A° / ₀b
MPi LAtch
MPi tEAch
MPi SEt
Loc.InP ProG
Loc.InP PrESET
Loc.InP PrG.PrE
ModE
ModE Add
ModE Sub
ModE AddAr
ModE SubAr
ModE AddbAt
ModE SubbAt
ModE Addtot
ModE Subtot
ModE trAiL
ModE tr_Ar
ConFiG
FActor
00.0001 ... 99.9999
diViSo
dp 0
dp 0.0
dp 0.00
dp 0.000
dp 0.0000
dp 0.00000
SetPt 000000
000000 ... 999999
CoLor rEd
CoLor rEdGrn
rESmd
rESmd Man.EL
rESmd no rES
rESmd EL.rEs
rESmd MAnrE

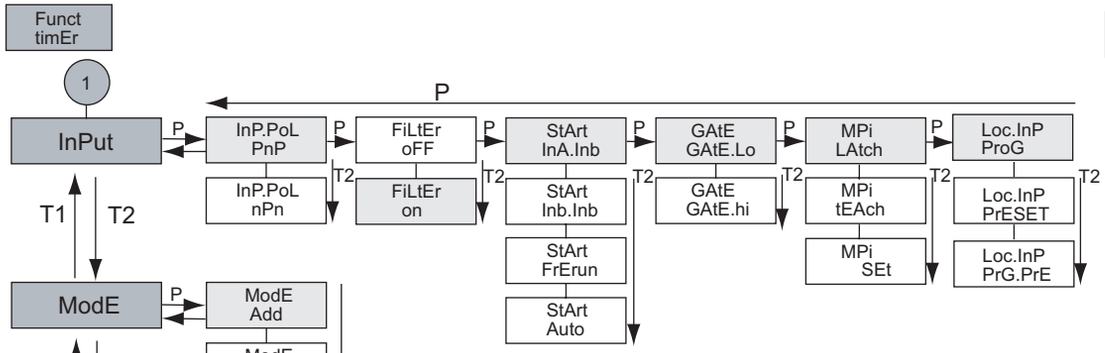

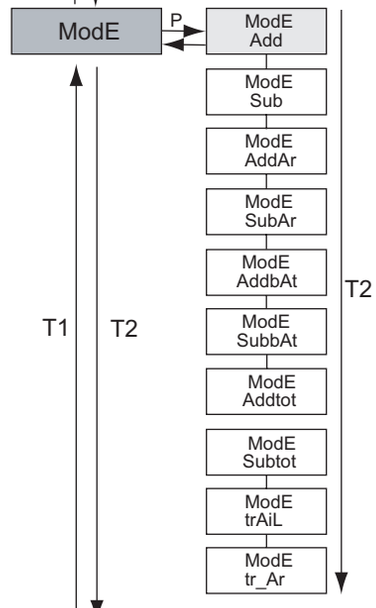

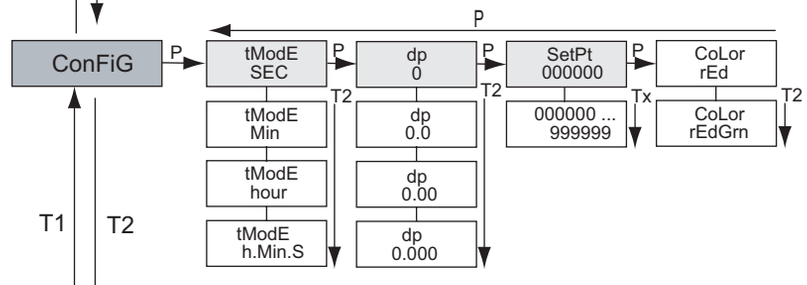

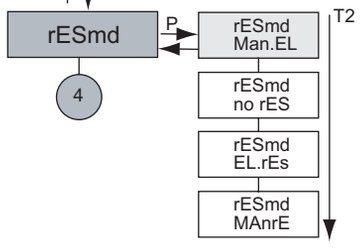

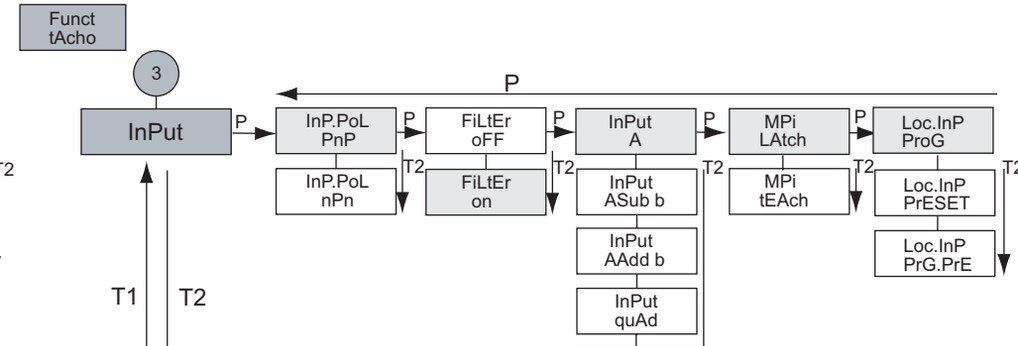

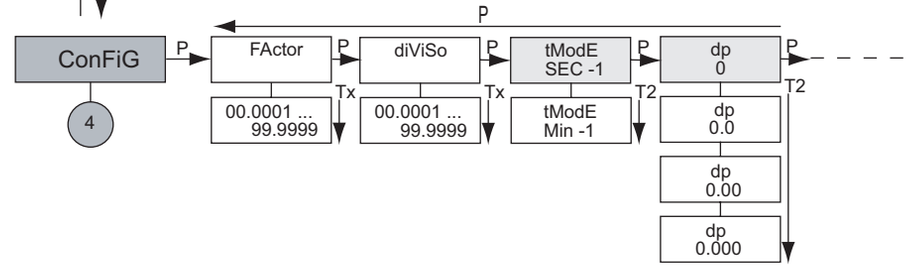

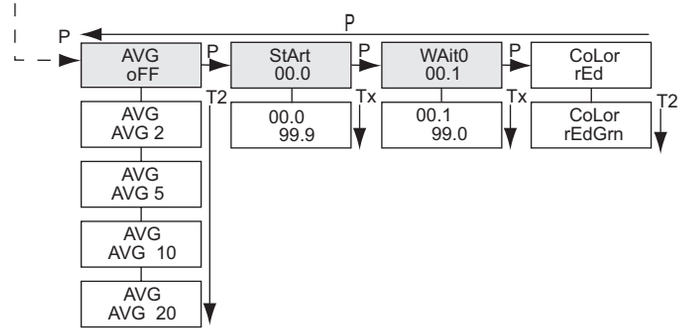

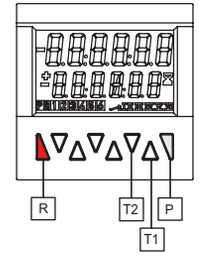

Fritz Kübler GmbH
Zähl- und Sensortechnik
Schubertstr. 47
D-78054 Villingen-Schwenningen
Telefon +49(0)7720-3903-0
Telefax +49(0)7720-21564
info@kuebler.com
www.kuebler.com

R600318.001