Product Details

A095 Plastic Base/Stainless Steel Stud



Materials

Base - Polyamide Reinforced Nylon
Stud - Stainless Steel type 303

Part No.	Thread Size D1 (mm)	Thread Length L (mm)	Base Diameter D2 (mm)	Overall Height H (mm)	Maximum Recommended Load (kg)
A095/044	M8	30	55	57	400
A095/027	M8	60	55	87	400
A095/028	M10	75	55	102	500
A095/029	M12	75	55	102	600
A095/030	M12	125	55	152	600
A095/031	M12	150	55	177	600
A095/010	M12	75	70	108	1000
A095/011	M12	125	70	158	1000
A095/006	M12	150	70	183	1000
A095/005	M16	75	70	111	1500
A095/036	M16	125	70	161	1500
A095/001	M16	150	70	186	1500
A095/004	M16	200	70	236	1500
A095/013	M16	75	100	119	2000
A095/024	M16	125	100	169	2000
A095/014	M16	150	100	194	2000
A095/015	M16	200	100	244	2000

A095/042	M20	125	100	175	2000
A095/003	M20	150	100	200	2000
A095/002	M20	200	100	250	2000
A095/043	M24	125	100	179	2000
A095/007	M24	150	100	204	2000
A095/016	M24	200	100	254	2000
A095/022	M24	250	100	304	2000

Dimensions are approximate

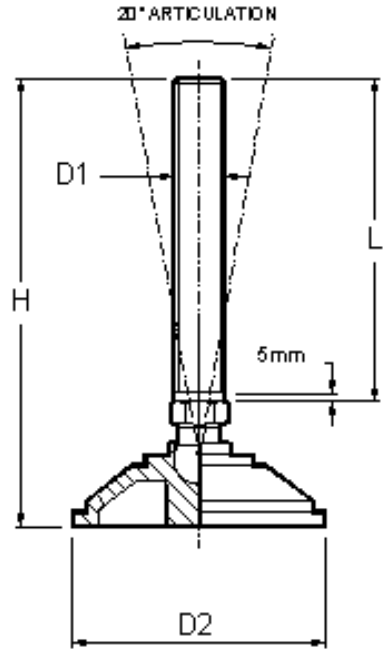

Registered Design