ECONOMY **BELLS**



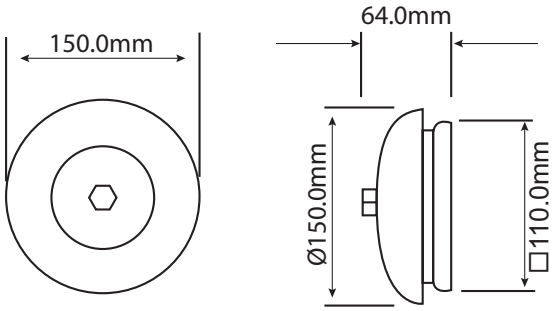

Acoustic Signals > **AB6 Solenoid Series**

Product overview

These traditional type bells produce their distinctive sound by means of a hardened striker powered by a solenoid, repeatedly striking the inside edge of metal gong, producing a loud & clear ringing tone.

They are suitable for light commercial/industrial use where intermittent audible signalling is required in a localised area.

The bells can be mounted on any flat surface utilising either the four mounting holes that are incorporated into the body of the casting or the universal mounting plate and gasket (supplied as standard) that offers multiple fixing location options.

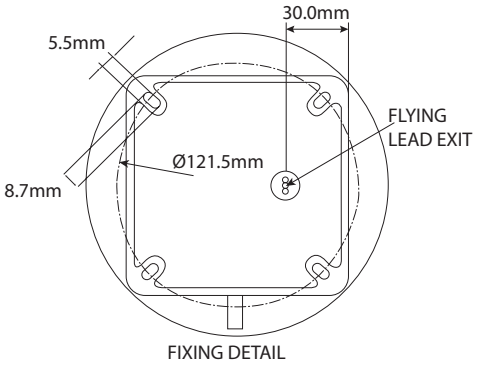

AB6 Solenoid Series > Ordering Information

Code No:	Voltage:	Gong size:	Current:
AB6-24DC	24v DC ---	152mm / 6”	80 mA
AB6-230AC	230v AC ~	152mm / 6”	30 mA

Features

- Economy signal
- Distinctive sound
- Die-Cast construction
- Universal mounting plate
- Supplied with 150mm flying leads
- Powder coated gong
- IP44

Material

Steel Gong

Aluminium Body

Kg 1.2 | ~ 50/60 **Hz** | **IP** 44 | **dB** 100 +/- 3 | **°C** -20+45 | ON 15 MINS OFF 20 MINS

APPROVALS and CONFORMITIES

RoHS