Design elements

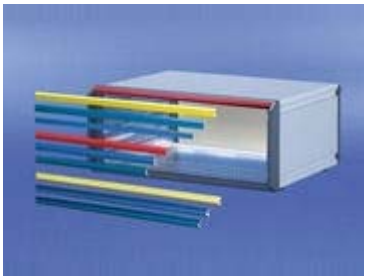

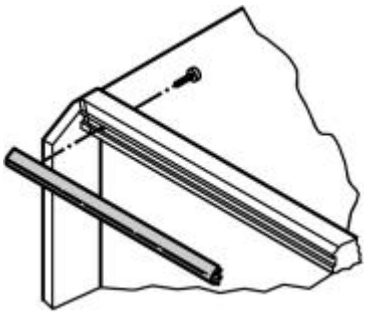



Product illustrations are exemplary illustrations and can deviate from supplied products.

Part no.: 20850-299

Features:

- To individualise case design

Technical Information:

Description	Width	Colour
Form 1	42 HP	Brilliant blue RAL 5007

Delivery comprises:

Qty	Description
1	Design element, Al extrusion, powder-coated
1	Assembly kit

Note:

- Size 28 HP and further colours available on request
- Cannot be combined with front hood