# OU5035

## Diffuse reflection sensor

OUT-DPKG/US-100-DPO

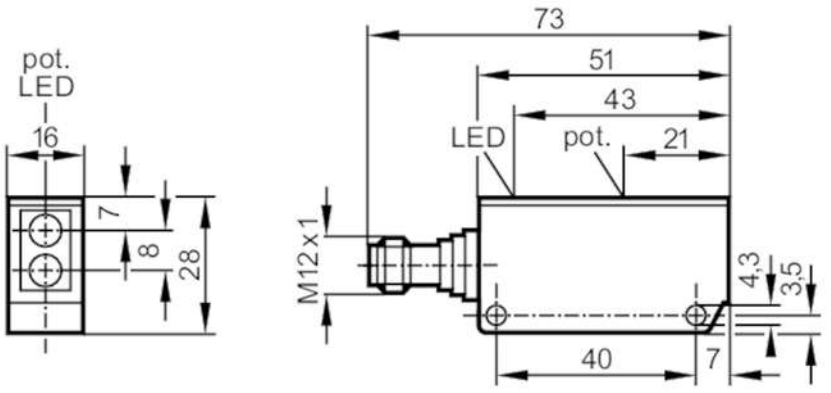


receiver in upper lens
transmitter in lower lens

| | | |
|---|---|---|
| **Product characteristics** | | |
| Type of light | | infrared light |
| Housing | | rectangular |
| **Application** | | |
| Function principle | | Diffuse reflection sensor |
| **Electrical data** | | |
| Operating voltage | [V] | 10...55 DC |
| Current consumption | [mA] | 35;  ((24 V)) |
| Protection class | | III |
| Reverse polarity protection | | yes |
| Type of light | | infrared light |
| Wave length | [nm] | 880 |
| **Outputs** | | |
| Electrical design | | PNP |
| Output function | | dark-on mode |
| Max. voltage drop switching output DC | [V] | 2.5 |
| Permanent current rating of switching output DC | [mA] | 250 |
| Switching frequency DC | [Hz] | 160 |
| Short-circuit protection | | yes |
| Type of short-circuit protection | | pulsed |
| Overload protection | | yes |
| **Detection zone** | | |
| Range | [mm] | 1...200;  (white paper 200 x 200 mm) |
| Range adjustable | | yes |
| Max. light spot diameter | [mm] | 180 |
| Light spot dimensions refer to | | at maximum range |

# OU5035

## Diffuse reflection sensor

OUT-DPKG/US-100-DPO

| | | | |
|---|---|---|---|
| **Operating conditions** | | | |
| Ambient temperature | [°C] | -25...80 | |
| Protection | | IP 67 | |
| **Tests / approvals** | | | |
| EMC | | EN 60947-5-2 | |
| | | EN 55011 | class B |
| MTTF | [years] | 685 | |
| **Mechanical data** | | | |
| Weight | [g] | 74.5 | |
| Housing | | rectangular | |
| Dimensions | [mm] | 28 x 16 x 51 | |
| Materials | | PPO modified | |
| Lens material | | glass | |
| Lens alignment | | side lens | |
| **Displays / operating elements** | | | |
| Display | | switching status | 1 x LED, yellow |
| **Accessories** | | | |
| Items supplied | | Angle bracket: 1, E20211 | |
| **Remarks** | | | |
| Pack quantity | | 1 pcs. | |

**Electrical connection**

Connector: 1 x M12; coding: A




Connection

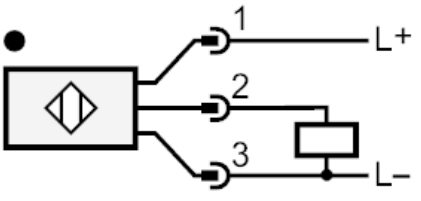

# OU5035

## Diffuse reflection sensor

OUT-DPKG/US-100-DPO

## Diagrams and graphs

excess gain graph

