Product Data Sheet

ref: P2072-S1 issue:B date: APRIL 2010

P2072-S1 - ANGLE BRACKETS

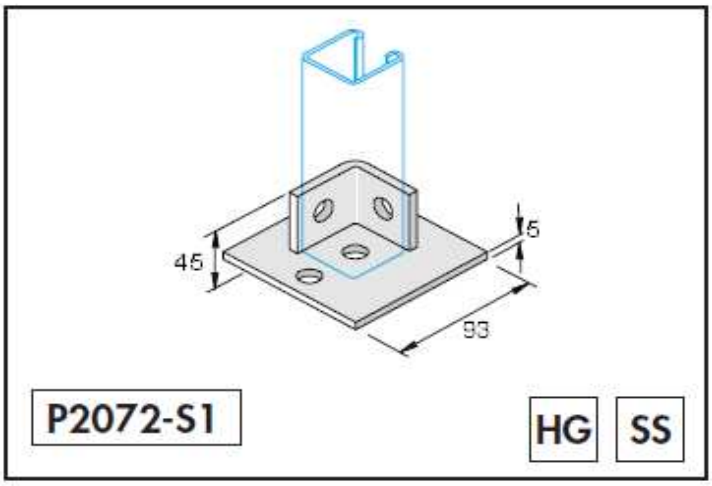

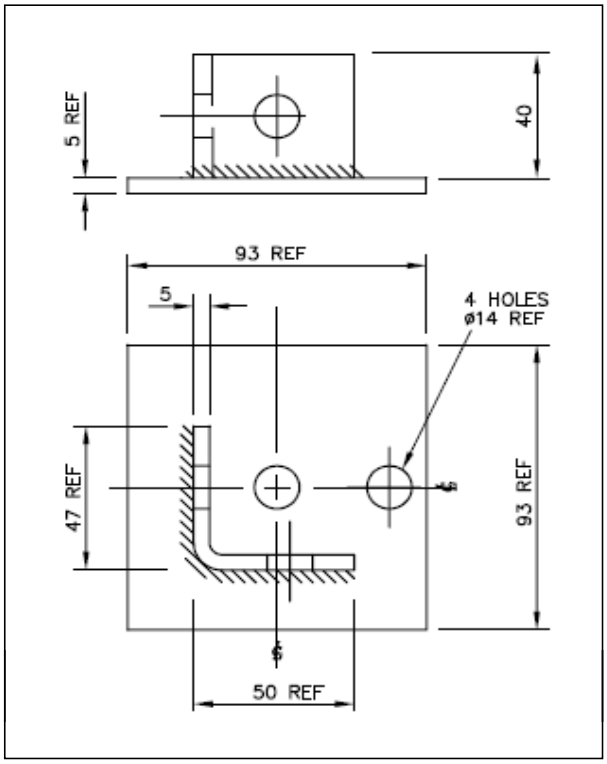

Material: Mild Steel - B.S.EN 10149-2-S315MC
S/STEEL BS EN 10088-2-1.4404+1D

Fixings:- All 14mm diameter use M12 grade 8.8 hex head screws with M12-BSEN 10025 S275 channel nuts.

Finishes: Hot Dip Galvanised-Process in accordance with BS EN ISO 1461
or Stainless Steel to BS EN 10088-2-1.4404+1D

Application: Drawings illustrate only one application for the fitting. In many cases other applications are possible.The channels shown in the application are P1000,41mm square,except where otherwise noted.
Loading data varies due to specific application, for all queries contact Unistrut UK.

Part Weight:- .48Kg
Box Weight: 4.8Kg
No. Per Box; 10

UNISTRUT HEALTH & SAFETY DATA SHEET REF'S :
No. 001 - PLAIN STEEL, PRE-GALVANIZED, GALVANIZED AND STAINLESS STEEL COMPONENTS
No. 099 - HOT DIP GALVANIZING (CHANNEL & COMPONENTS)
No. 102 - STEEL