BF2600A400

THREE-POLE CONTACTOR, IEC OPERATING CURRENT IE (AC3) = 26A, AC COIL 50/60HZ, 400VAC



Product designation			Power contactor
Product type designation			BF26
Contact characteristics			
Number of poles		nr.	3
Rated insulation voltage Ui IEC/EN		V	690
Rated impulse withstand voltage Uimp		kV	6
Operational frequency			
	min	Hz	25
	max	Hz	400
IEC Conventional free air thermal current Ith		A	45
Operational current Ie			
	AC-1 (≤40°C)	A	45
	AC-1 (≤55°C)	A	36
	AC-1 (≤70°C)	A	32
	AC-3 (≤440V ≤55°C)	A	26
	AC-4 (400V)	A	11.5
Rated operational power AC-3 (T≤55°C)			
	230V	kW	7.3
	400V	kW	13
	415V	kW	14
	440V	kW	14
	500V	kW	15.6
	690V	kW	18.5
Rated operational power AC-1 (T≤40°C)			
	230V	kW	17
	400V	kW	30
	500V	kW	37
	690V	kW	51
IEC max current Ie in DC1 with L/R ≤ 1ms with 1 poles in series			
	≤24V	A	25
	48V	A	21
	75V	A	18
	110V	A	6
	220V	A	–
IEC max current Ie in DC1 with L/R ≤ 1ms with 2 poles in series			
	≤24V	A	28
	48V	A	28
	75V	A	25
	110V	A	22
	220V	A	2
IEC max current Ie in DC1 with L/R ≤ 1ms with 3 poles in series			
	≤24V	A	28
	48V	A	28
	75V	A	25
	110V	A	24

The characteristics described in this document are subject to updates or modifications at any time. The descriptions, technical and functional information, illustrations and instructions in this brochure are purely illustrative, and are consequently not contractually binding

	220V	A	20
IEC max current Ie in DC1 with L/R ≤ 1ms with 4 poles in series			
	≤24V	A	28
	48V	A	28
	75V	A	25
	110V	A	24
	220V	A	26
IEC max current Ie in DC3-DC5 with L/R ≤ 15ms with 1 poles in series			
	≤24V	A	18
	48V	A	15
	75V	A	13
	110V	A	2
	220V	A	–
IEC max current Ie in DC3-DC5 with L/R ≤ 15ms with 2 poles in series			
	≤24V	A	20
	48V	A	20
	75V	A	18
	110V	A	13
	220V	A	3
IEC max current Ie in DC3-DC5 with L/R ≤ 15ms with 3 poles in series			
	≤24V	A	25
	48V	A	25
	75V	A	20
	110V	A	18
	220V	A	19
IEC max current Ie in DC3-DC5 with L/R ≤ 15ms with 4 poles in series			
	≤24V	A	30
	48V	A	30
	75V	A	25
	110V	A	20
	220V	A	15
Short-time allowable current for 10s (IEC/EN60947-1)		A	210
Protection fuse			
	gG (IEC)	A	50
	aM (IEC)	A	32
Making capacity (RMS value)		A	260
Breaking capacity at voltage			
	440V	A	208
	500V	A	184
	690V	A	168
Resistance per pole (average value)		mΩ	2
Power dissipation per pole (average value)			
	Ith	W	4
	AC3	W	1.4
Tightening torque for terminals			
	min	Nm	2.5
	max	Nm	3
	min	Ibin	1.8
	max	Ibin	2.2
Tightening torque for coil terminal			
	min	Nm	0.8
	max	Nm	1
	min	Ibft	0.8

The characteristics described in this document are subject to updates or modifications at any time. The descriptions, technical and functional information, illustrations and instructions in this brochure are purely illustrative, and are consequently not contractually binding

		max	lbft	0.74
Max number of wires simultaneously connectable			nr.	2
Conductor section				
	Flexible w/o lug conductor section			
		min	mm²	2.5
		max	mm²	16
	Flexible c/w lug conductor section			
		min	mm²	1
		max	mm²	10
	Flexible with insulated spade lug conductor section			
		min	mm²	1
		max	mm²	10
Power terminal protection according to IEC/EN 60529				IP20 when wired
Mechanical features				
Operating position				
		normal		Vertical plan
		allowable		±30°
Fixing				Screw / DIN rail 35mm
Weight			g	436
Operations				
Mechanical life			cycles	20000000
Electrical life			cycles	1600000
Safety related data				
Performance level B10d according to EN/ISO 13489-1				
		rated load	cycles	1600000
		mechanical load	cycles	20000000
Mirror contats according to IEC/EN 609474-4-1				yes
EMC compatibility				yes
AC coil operating				
Rated AC voltage at 50/60Hz, 60Hz				
		min	V	12
		max	V	600
AC operating voltage				
	of 50/60Hz coil powered at 50Hz			
	pick-up			
		max	%Us	110
	drop-out			
		min	%Us	20
		max	%Us	55
	of 50/60Hz coil powered at 60Hz			
	pick-up			
		min	%Us	85
		max	%Us	110
	drop-out			
		min	%Us	20
		max	%Us	55
AC operating voltage at 20°C				
	of 50/60Hz coil powered at 50Hz			
		in-rush	VA	75
		holding	VA	9
	of 50/60Hz coil powered at 60Hz			
		in-rush	VA	70
		holding	VA	6.5

The characteristics described in this document are subject to updates or modifications at any time. The descriptions, technical and functional information, illustrations and instructions in this brochure are purely illustrative, and are consequently not contractually binding

of 60Hz coil powered at 60Hz				
		in-rush	VA	75
		holding	VA	9
Dissipation at holding ≤20°C 50Hz			W	2.5
Max cycles frequency				
Mechanical operation			cycles/h	3600
Operating times				
Average time for Us control				
in AC				
	Closing NO			
		min	ms	8
		max	ms	24
	Opening NO			
		min	ms	5
		max	ms	15
	Closing NC			
		min	ms	9
		max	ms	20
	Opening NC			
		min	ms	9
		max	ms	17
UL technical data				
Full-load current (FLA) for three-phase AC motor				
		at 480V	A	21
		at 600V	A	22
Yielded mechanical performance				
for single-phase AC motor				
		110/120V	hp	2
		230V	hp	5
for three-phase AC motor				
		200/208V	hp	7.5
		220/230V	hp	7.5
		460/480V	hp	15
		575/600V	hp	20
General USE				
Contactor				
		AC current	A	45
Ambient conditions				
Temperature				
Operating temperature				
		min	°C	-50
		max	°C	70
Storage temperature				
		min	°C	-60
		max	°C	80
Max altitude			m	3000
Resistance & Protection				
Pollution degree				3
Dimensions				

The characteristics described in this document are subject to updates or modifications at any time. The descriptions, technical and functional information, illustrations and instructions in this brochure are purely illustrative, and are consequently not contractually binding

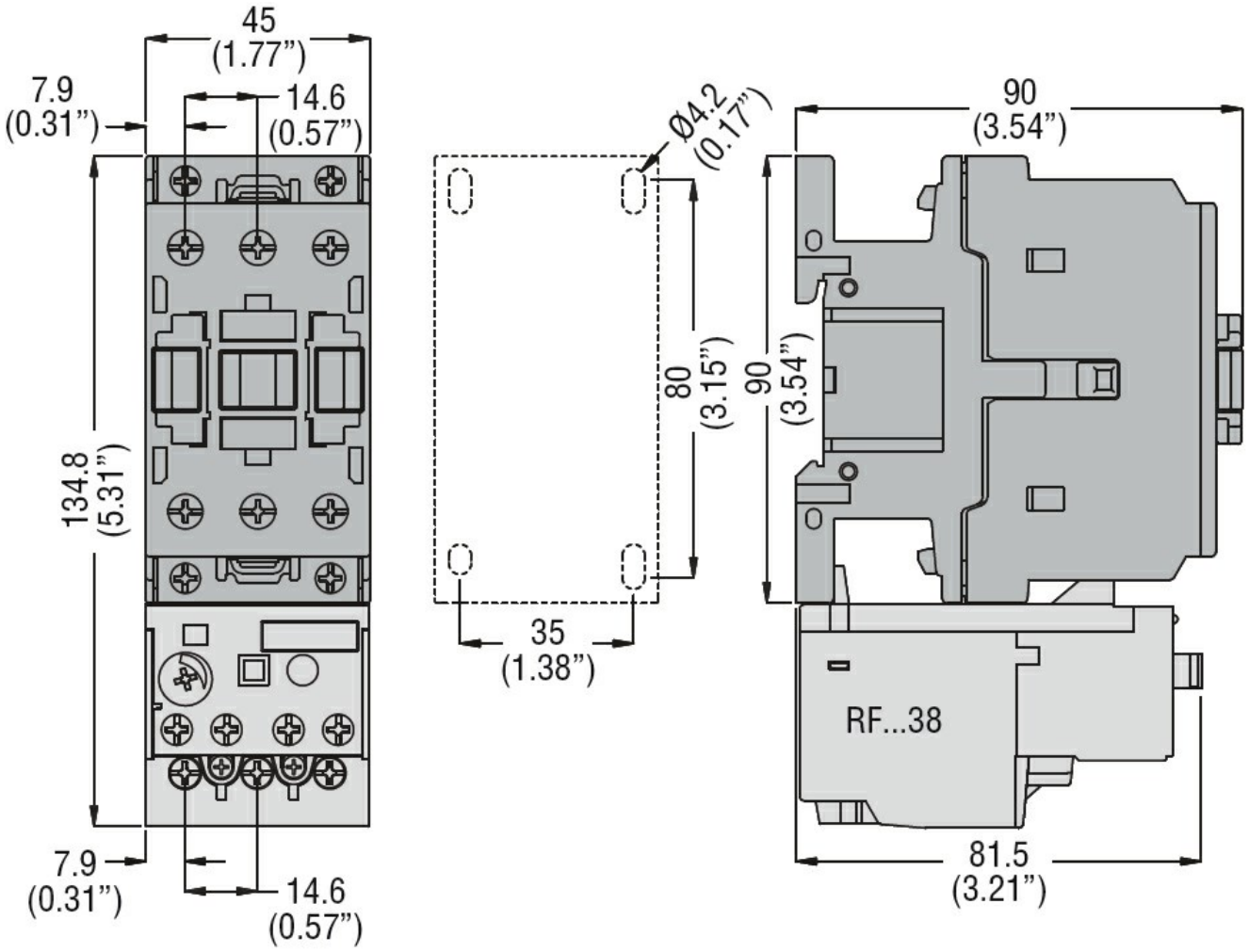

Wiring diagrams

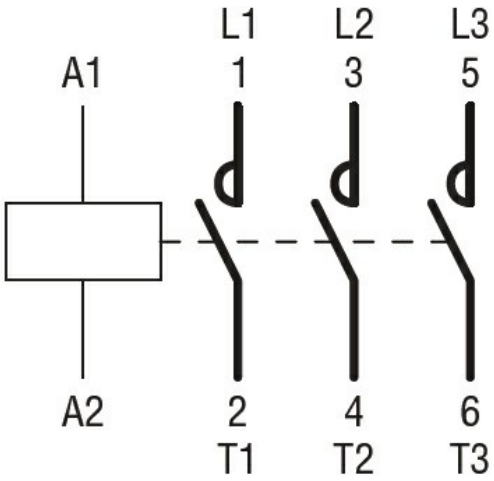

Certifications and compliance

Compliance

CSA C22.2 n° 60947-1
CSA C22.2 n° 60947-4-1
IEC/EN 60947-1
IEC/EN 60947-4-1
UL 60947-1

The characteristics described in this document are subject to updates or modifications at any time. The descriptions, technical and functional information, illustrations and instructions in this brochure are purely illustrative, and are consequently not contractually binding

	UL 60947-4-1
Certificates	
	CCC
	cULus
	EAC

The characteristics described in this document are subject to updates or modifications at any time. The descriptions, technical and functional information, illustrations and instructions in this brochure are purely illustrative, and are consequently not contractually binding