E12715

Damping magnet

MAGNET M6.0 IATA E12539 5X

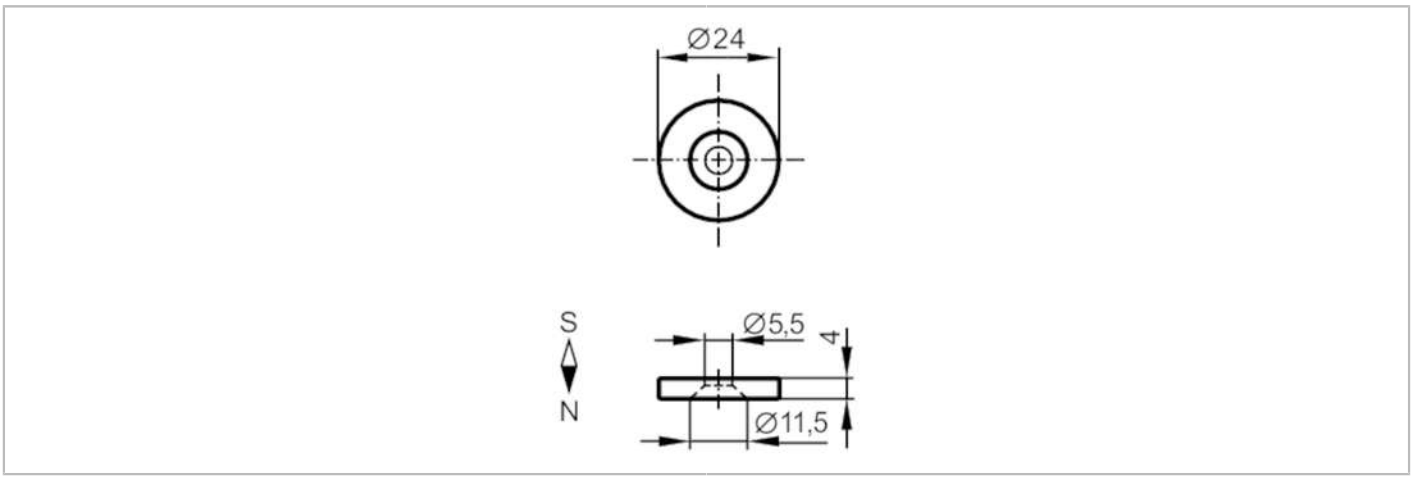

Operating conditions		
Ambient temperature	[°C]	-40...80
Mechanical data		
Weight	[g]	112
Dimensions	[mm]	Ø 24 / L = 4
Materials		neodymium
Magnetic field strength	[mT]	240
Remarks		
Pack quantity		5 pcs.