PRODUCT DETAILS

ARTICLE: 39136

WHEEL U 175X50/60 BB SWIVEL TP X20



Wheel series U

Die-cast aluminium wheels, for high temperature applications: -40°C / +270°C (-40°F / +518°F). Available with standard or stainless steel ball bearings.
Wheel fitted with ball bearings.

Castor series INOX20

Inox20 series, polished stainless steel forks, swivels with double ball races.

Technical data

Wheel diameter	D	175 mm
Tyre width	E	50,0 mm
Bearing seat diameter	s	47 mm
Bore diameter	d	20 mm
Outer faces bearings distance	V	54 mm
Weight article		2,400 kg
Hub width	L	60 mm
Overall height	H	215 mm
Top plate outer dimensions	AxB	135x110 mm
Bolt hole spacing	axb	105x75 mm
Bolt hole spacing	axb	105x80 mm
Fixing bolt diameter	g	M10
Offset	F	57 mm
Fork width	U	60 mm
Load Capacity		370 kg

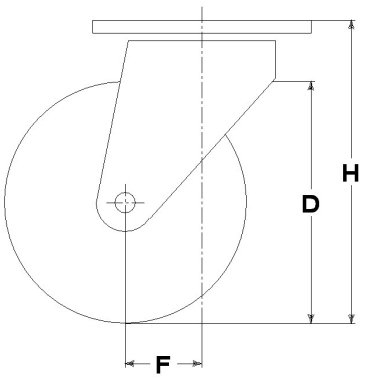

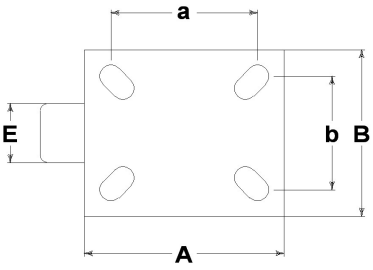

Related Articles

Spare part wheel: 39036CC

GENERAL INFORMATION / RECOMMENDATIONS AND WARNINGS
The cited text and the complete catalogue in their most up-dated versions are available in the OEM's website page www.lagspa.it/downloads. The dimensions, descriptions, specifications and illustrations herein are indicative and subject to variations without notice. The fact that products are illustrated herein does not necessarily imply they are available from stock nor does it place us under any obligation to supply them.
Tests carried out refer to the original products with original accessories: the replacement of one of the components with others of different manufacture might prevent the same results from being achieved and will automatically invalidate any guarantee. Please contact our technical service concerning any special application.