Block assembly kit

- End plate kit
- Body-to-body assembly clamps
- Aluminum



Technical data

Part No.
P652AT502466001

Includes NBR O-ring

Technical information

Material	
Housing	Aluminum
Seal	Nitrile butadiene rubber

Dimensions

Dimensions

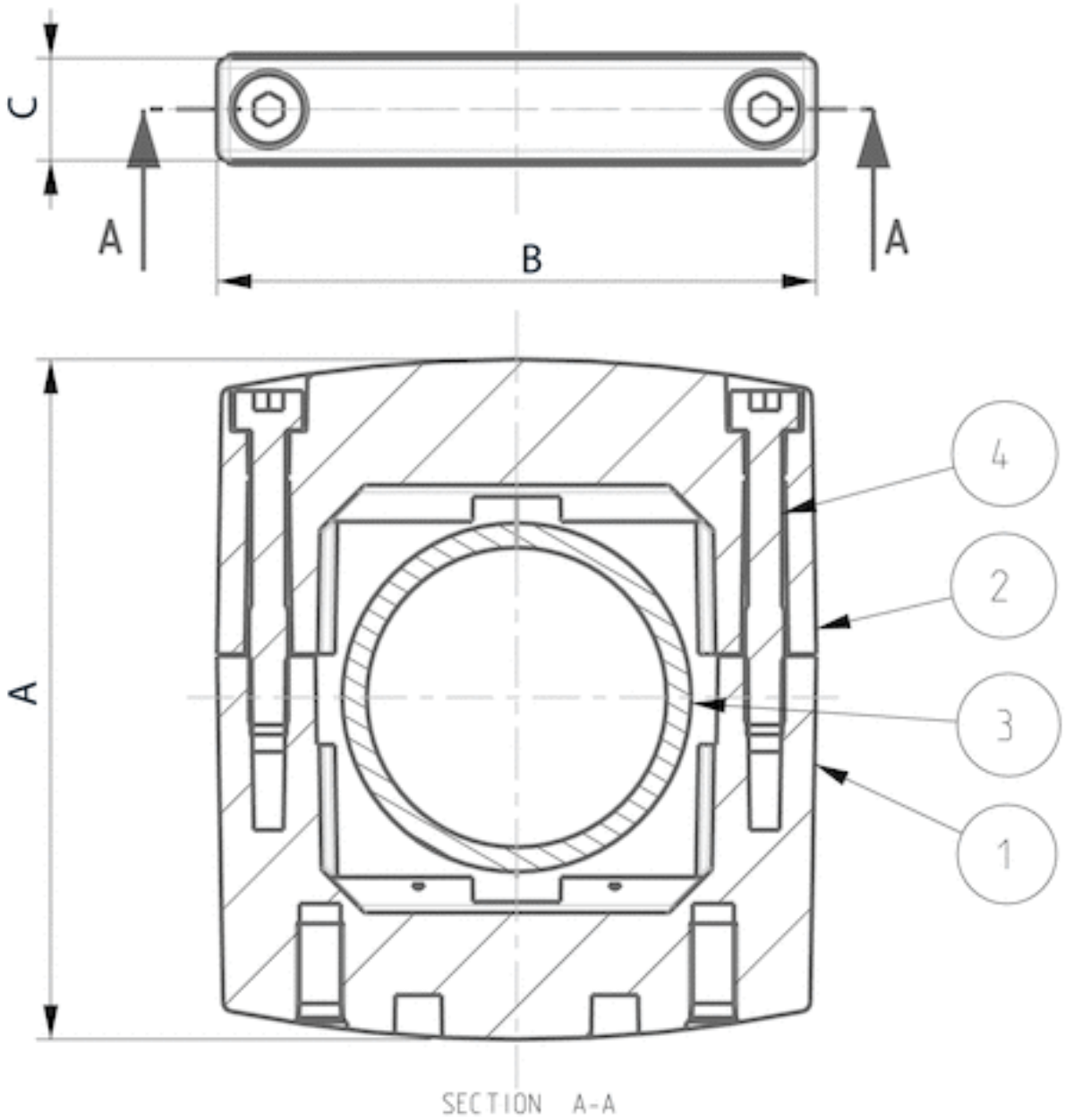

1) Block assembly kit
2) Block assembly kit
3) O-ring
4) Screw

Dimensions

Series	A	B	C
652	69	61	10

Efficient pneumatic solutions, our program: cylinders and drives, valves and valve systems, air supply management



Visit us: Emerson.com/Aventics

Your local contact: Emerson.com/contactus

Emerson.com

Facebook.com/EmersonAutomationSolutions

LinkedIn.com/company/Emerson-Automation-Solutions

Twitter.com/EMR_Automation

An example configuration is depicted on the title page. The delivered product may thus vary from that in the illustration. Subject to change. This Document, as well as the data, specifications and other information set forth in it, are the exclusive property of AVENTICS GmbH. It may not be reproduced or given to third parties without its consent. Only use the AVENTICS products shown in industrial applications. Read the product documentation completely and carefully before using the product. Observe the applicable regulations and laws of the respective country. When integrating the product into applications, note the system manufacturer's specifications for safe use of the product. The data specified only serve to describe the product. No statements concerning a certain condition or suitability for a certain application can be derived from our information. The information given does not release the user from the obligation of own judgement and verification. It must be remembered that the products are subject to a natural process of wear and aging.

The Emerson logo is a trademark and service mark of Emerson Electric Co. Brand logotype are registered trademarks of one of the Emerson family of companies. All other marks are the property of their respective owners. © 2020 Emerson Electric Co. All rights reserved.
2020-12

EMERSON

CONSIDER IT SOLVED™