DATASHEET - EASY-E4-AC-12RCX1P



Control relays, Expandable, networkable (Ethernet), 100 - 240 V AC, 100 - 240 V DC (cULus: 100 - 110 V DC), Digital: 8, Quantity of outputs: Relay: 4, Push-in terminals

Powering Business Worldwide

Part no. EASY-E4-AC-12RCX1P
Catalog No. 197509

Delivery program

Basic function			easyE4 base device
Description			Electronic control relay Rated operating voltage 100 to 240V AC or 100 to 240V DC For cULus, 100–110 VDC applies to all VDC specifications. 8 digital inputs with 100–240 VAC or 100–240 VDC 4 relay outputs for 12–250 VAC or 12–240 VDC with diagnostic LEDs Real-time clock with Ethernet interface Expandable with the easyE4 series of digital input/output expansions with easy-E4-CONNECT1 connector (Item Y7-197225) Expandable with communications modules EASY-COM-... Push in terminals
Inputs			
Digital			8
Outputs			
Quantity of outputs			Relay: 4
Additional features			
Real time clock			#
Expansions			Expandable networkable (Ethernet)
Supply voltage			100 - 240 V AC, 100 - 240 V DC (cULus: 100 - 110 V DC)
Software			EASYSOFT-SWLIC/easySoft 7
Connection type			Push-in terminals

Technical data

General

Standards			EN 61000-6-2 EN 61000-6-3 IEC 60068-2-6 IEC 60068-2-27 IEC 60068-2-30 IEC/EN 61131-2 EN 61010 EN 50178
Approvals			
Approvals			cULus
certificate			CE
shipping classification			DNV GL
			DNV·GL
Dimensions (W x H x D)		mm	71.5 x 90 x 58
Weight		kg	0.186
Mounting			Top-hat rail IEC/EN 60715, 35 mm or screw fixing using fixing brackets ZB4-101-GF1 (accessories)
Connection type			Push-in terminals
Ethernet			
Connections			RJ45 plug, 8-pin
Cable			CAT5

Terminal capacities

Push-in terminals			
Solid		mm^2	0.2 - 2.5

flexible		mm^2	0.2 - 2.5
Solid or flexible conductor, with ferrule		mm^2	0,25 - 1,5
Solid or stranded		AWG	24 - 14
Standard screwdriver		mm	0.4 x 2.5
Stripping length		mm	8

Display

Status indicator (LED)			Power/RUN Ethernet

Climatic environmental conditions

Operating ambient temperature		°C	-25 to 55, cold as per IEC 60068-2-1, heat as per IEC 60068-2-2
Condensation			Take appropriate measures to prevent condensation
Storage	ϑ	°C	-40 - +70
relative humidity		%	in accordance with IEC 60068-2-30, IEC 60068-2-78 5 - 95
Air pressure (operation)		hPa	795 - 1080

Ambient conditions, mechanical

Protection type (IEC/EN 60529, EN50178, VBG 4)			IP20
Vibrations		Hz	In accordance with IEC 60068-2-6 constant amplitude 0.15 mm: 10 - 57 constant acceleration 2 g: 57 - 150
Mechanical shock resistance (IEC/EN 60068-2-27) semi-sinusoidal 15 g/11 ms		Impacts	18
Drop to IEC/EN 60068-2-31	Drop height	mm	50
Free fall, packaged (IEC/EN 60068-2-32)		m	0.3
Mounting position			Vertical or horizontal

Electromagnetic compatibility (EMC)

Overvoltage category/pollution degree			III/2
Electrostatic discharge (ESD)			
applied standard			nach IEC/EN 61000-4-2
Air discharge		kV	8
Contact discharge		kV	6
Electromagnetic fields (RFI) to IEC EN 61000-4-3		V/m	0.08 - 1.0 GHz: 10 1.4 - 2 GHz: 3 2.0 - 2.7 GHz: 1
Radio interference suppression			EN 61000-6-3 Class B
Burst		kV	according to IEC/EN 61000-4-4 Supply cables: 2 Signal cables: 2
power pulses (Surge)			according to IEC/EN 61000-4-5 1 kV (supply cables, symmetrical) 2 kV (supply cables, asymmetrical)
Immunity to line-conducted interference to (IEC/EN 61000-4-6)		V	10

Insulation resistance

Clearance in air and creepage distances			nach EN 50178, EN 61010-2-201, UL61010-2-201, CSA-C22.2 NO. 61010-2-201
Insulation resistance			per EN 50178, EN 61010-2-201, UL61010-2-201, CSA-C22.2 NO. 61010-2-201

Back-up of real-time clock

Back-up of real-time clock			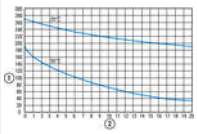
			① Backup time (hours) with fully charged double layer capacitor ② Service life (years)
Accuracy of the real-time clock		s/day	typ. ± 2 (± 0.2 h/year)
			depending on ambient air temperature fluctuations of up to ± 5 s/day (± 0.5 h/year) are possible

Repetition accuracy of timing relays

Accuracy of timing relays (of values)		%	± 0.02
Resolution			
Range “S”		ms	5
Range “M:S”		s	1
Range “H:M”		min	1

Power supply

Rated operational voltage	U_e	V	100 - 240V DC (-15/+10%)

			100 - 240 DC (cULus: 100 -110 DC) (-15/+10%)
Permissible range	U_e		85 - 264 V AC 85 - 264 V DC (cULus: 85 - 120 V DC)
Residual ripple		%	≦ 5
Protection against polarity reversal			yes
Frequency		Hz	50/60 (± 5%)
Voltage dips		ms	≤ 20 ms at 100V AC 10 ms at 100V DC
Fuse		A	≧ 1A (T)
Power loss	P	W	Normally 10

Digital inputs 115/230 V AC

Number			8
Potential isolation			from power supply: no for memory card: no for Ethernet interface: yes between inputs: no from the outputs: yes to the base unit: yes to the expansion units: yes
Rated operational voltage	U_e	V	100 - 240 V AC 100 - 240 V DC (cULus: 100 - 110 V DC)
Input voltage	U_e	V	Condition 0: 0 - 40V AC/DC Condition 1: 79–264 V AC/DC (cULus: 79–264 V AC/79–120 V DC)
Rated frequency		Hz	50/60
Input current at signal 1		mA	I1 - I6: 6 x 0.25 (at 115 V AC, 60 Hz) I7, I8: 2 x 4 (at 115 V AC, 60 Hz) I1 - I6: 6 x 0.5 (at 230 V AC, 50 Hz) I7, I8: 2 x 6 (at 230 V AC, 50 Hz) I1 - I8: 8 x 0.25 (at 115V DC) I1 - I8: 8 x 0.5 (at 230V DC)
Deceleration time		ms	45/38 (0 -> 1/1 -> 0, debounce ON 50/60Hz) for AC type 25/21 (0 -> 1/1 -> 0, debounce OFF 50/60Hz) for AC 20 (0 -> 1/1 -> 0, debounce ON) for DC type 0.03 (0 -> 1/1 -> 0, debounce OFF) for DC
Cable length		m	40 (unshielded) (I1 - I6) 100 (unshielded) (I7, I8)

Relay outputs

Number			4
Outputs in groups of			1
Parallel switching of outputs for increased output			Not permitted
Protection of an output relay			B16 circuit breaker or 8 A (T) fuse
Potential isolation			Safe isolation according to EN 50178: 300 V AC Basic isolation: 600 V AC from power supply: yes From the inputs: yes between outputs: yes to Ethernet: yes to control buttons: yes to expansion devices: yes
Contacts			
Conventional thermal current (10 A UL)		A	8
Recommended for load: 12 V AC/DC		mA	> 500
Rated impulse withstand voltage U_{imp} of contact coil		kV	6
Rated operational voltage	U_e	V AC	240
Rated insulation voltage	U_i	V AC	240
Safe isolation according to EN 50178		V AC	300 between coil and contact 300 between two contacts
Making capacity			
AC–-15, 250 V AC, 3 A (600 ops./h)	Operations		300000
DC-13, L/R ≦ 150 ms, 24 V DC, 1 A (500 S/h)	Operations		200000
Breaking capacity			
AC-15, 250 V AC, 3 A (600 Ops./h)	Operations		300000
DC-13, L/R ≦ 150 ms, 24 V DC, 1 A (500 S/h)	Operations		200000
Filament bulb load			
1000 W at 230/240 V AC	Operations		25000
500 W at 115/120 V AC	Operations		25000
Fluorescent lamp load			

Fluorescent lamp load 10 x 58 W at 230/240 V AC			
With upstream electrical device	Operations		25000
Uncompensated	Operations		25000
Fluorescent lamp load 1 x 58 W at 230/240 V AC, conventional, compensated	Operations		25000
Switching frequency			
Mechanical operations		x 10^6	10
Switching frequency		Hz	10
Resistive load/lamp load		Hz	2
Inductive load		Hz	0.5
UL/CSA			
Uninterrupted current at 240 V AC		A	10
Uninterrupted current at 24 V DC		A	8
AC			
Control Circuit Rating Codes (utilization category)			B 300 Light Pilot Duty
Max. rated operational voltage		V AC	300
max. thermal continuous current cos φ = 1 at B 300		A	5
max. make/break cos φ ≠ capacity 1 at B 300		VA	3600/360
DC			
Control Circuit Rating Codes (utilization category)			R 300 Light Pilot Duty
Max. rated operational voltage		V DC	300
Max. thermal uninterrupted current at R 300		A	1
Max. make/break capacity at R 300		VA	28/28

Ethernet

Data transfer rate		Mbit/s	10/100
Connections			RJ45 plug, 8-pin
Cable			CAT5

Design verification as per IEC/EN 61439

Technical data for design verification			
Static heat dissipation, non-current-dependent	P_{vs}	W	10
Operating ambient temperature min.		°C	-25
Operating ambient temperature max.		°C	55
IEC/EN 61439 design verification			
10.2 Strength of materials and parts			
10.2.2 Corrosion resistance			Meets the product standard's requirements.
10.2.3.1 Verification of thermal stability of enclosures			Meets the product standard's requirements.
10.2.3.2 Verification of resistance of insulating materials to normal heat			Meets the product standard's requirements.
10.2.3.3 Verification of resistance of insulating materials to abnormal heat and fire due to internal electric effects			Meets the product standard's requirements.
10.2.4 Resistance to ultra-violet (UV) radiation			Meets the product standard's requirements.
10.2.5 Lifting			Does not apply, since the entire switchgear needs to be evaluated.
10.2.6 Mechanical impact			Does not apply, since the entire switchgear needs to be evaluated.
10.2.7 Inscriptions			Meets the product standard's requirements.
10.3 Degree of protection of ASSEMBLIES			Meets the product standard's requirements.
10.4 Clearances and creepage distances			Meets the product standard's requirements.
10.5 Protection against electric shock			Does not apply, since the entire switchgear needs to be evaluated.
10.6 Incorporation of switching devices and components			Does not apply, since the entire switchgear needs to be evaluated.
10.7 Internal electrical circuits and connections			Is the panel builder's responsibility.
10.8 Connections for external conductors			Is the panel builder's responsibility.
10.9 Insulation properties			
10.9.2 Power-frequency electric strength			Is the panel builder's responsibility.
10.9.3 Impulse withstand voltage			Is the panel builder's responsibility.
10.9.4 Testing of enclosures made of insulating material			Is the panel builder's responsibility.
10.10 Temperature rise			The panel builder is responsible for the temperature rise calculation. Eaton will provide heat dissipation data for the devices.
10.11 Short-circuit rating			Is the panel builder's responsibility.

10.12 Electromagnetic compatibility			Is the panel builder's responsibility.
10.13 Mechanical function			The device meets the requirements, provided the information in the instruction leaflet (IL) is observed.

Technical data ETIM 7.0

PLC's (EG000024) / Logic module (EC001417)			
Electric engineering, automation, process control engineering / Control / Programmable logic control (SPS) / Logic module (ecl@ss10.0.1-27-24-22-16 [AKE539014])			
Supply voltage AC 50 Hz		V	85 - 264
Supply voltage AC 60 Hz		V	85 - 264
Supply voltage DC		V	85 - 264
Voltage type of supply voltage			AC/DC
Switching current		A	8
Number of analogue inputs			0
Number of analogue outputs			0
Number of digital inputs			8
Number of digital outputs			4
With relay output			Yes
Number of HW-interfaces industrial Ethernet			1
Number of interfaces PROFINET			0
Number of HW-interfaces RS-232			0
Number of HW-interfaces RS-422			0
Number of HW-interfaces RS-485			0
Number of HW-interfaces serial TTY			0
Number of HW-interfaces USB			0
Number of HW-interfaces parallel			0
Number of HW-interfaces Wireless			0
Number of HW-interfaces other			1
With optical interface			No
Supporting protocol for TCP/IP			Yes
Supporting protocol for PROFIBUS			No
Supporting protocol for CAN			No
Supporting protocol for INTERBUS			No
Supporting protocol for ASI			No
Supporting protocol for KNX			No
Supporting protocol for MODBUS			Yes
Supporting protocol for Data-Highway			No
Supporting protocol for DeviceNet			No
Supporting protocol for SUCONET			No
Supporting protocol for LON			No
Supporting protocol for PROFINET IO			No
Supporting protocol for PROFINET CBA			No
Supporting protocol for SERCOS			No
Supporting protocol for Foundation Fieldbus			No
Supporting protocol for EtherNet/IP			No
Supporting protocol for AS-Interface Safety at Work			No
Supporting protocol for DeviceNet Safety			No
Supporting protocol for INTERBUS-Safety			No
Supporting protocol for PROFIsafe			No
Supporting protocol for SafetyBUS p			No
Supporting protocol for other bus systems			No
Radio standard Bluetooth			No
Radio standard WLAN 802.11			No
Radio standard GPRS			No
Radio standard GSM			No
Radio standard UMTS			No
IO link master			No

Redundancy		No
With display		No
Degree of protection (IP)		IP20
Basic device		Yes
Expandable		Yes
Expansion device		No
With timer		Yes
Rail mounting possible		Yes
Wall mounting/direct mounting		Yes
Front build in possible		Yes
Rack-assembly possible		No
Suitable for safety functions		No
Category according to EN 954-1		None
SIL according to IEC 61508		None
Performance level acc. EN ISO 13849-1		None
Appendant operation agent (Ex ia)		No
Appendant operation agent (Ex ib)		No
Explosion safety category for gas		None
Explosion safety category for dust		None
Width	mm	71.5
Height	mm	90
Depth	mm	58

Approvals

UL File No.		E205091
UL Category Control No.		NRAQ/7
North America Certification		UL listed
Degree of Protection		IEC: IP20, UL/CSA Type: -

Dimensions

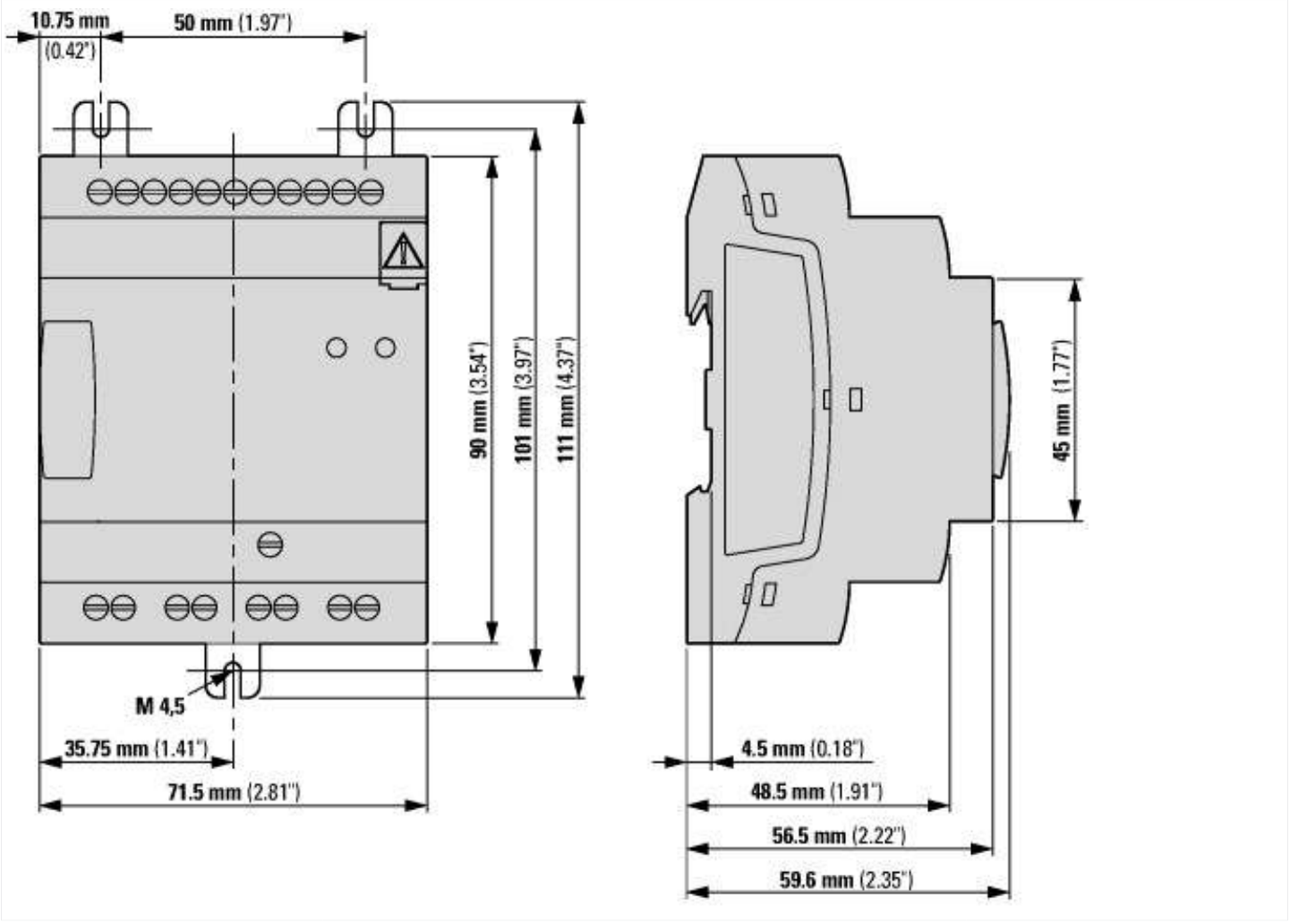

Additional product information (links)

f1=1454&f2=1174&f3=1755;Download Software easySoft V7	http://applications.eaton.eu/sdlc?LX=11&amp
Product overview (WEB)	http://www.eaton.eu/easyE4

© 10/2021 by Eaton Industries GmbH