Positioning element
for inductive encoders Ri-QR24
P5-Ri-QR24

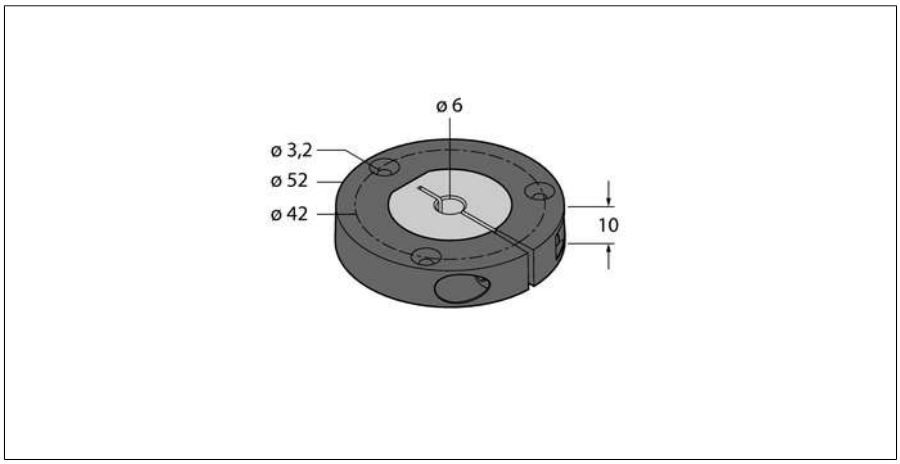

- **Positioning element, for Ø 6 mm shafts**

Type code	P5-Ri-QR24
Ident no.	1590925

Edition • 2014-06-17T08:41:12+02:00

Hans Turck GmbH & Co.KG ● D-45472 Mülheim an der Ruhr ● Witzlebenstraße 7 ● Tel. 0208 4952-0 ● Fax 0208 4952-264 ● more@turck.com ● www.turck.com