MURR ELEKTRONIK
stay connected

SVS Eco valve plug CI-9.4mm screw terminal

2-pol. + PE, max. 0,5mm², 4 -6mm

Form CI (9.4 mm)
250 V AC/DC
without components
metric
field-wireable
Plastic housings with good resistance against chemicals and oils.
The resistance to aggressive media should be individually tested for your application. Further details on request.

Link to Product

Illustration



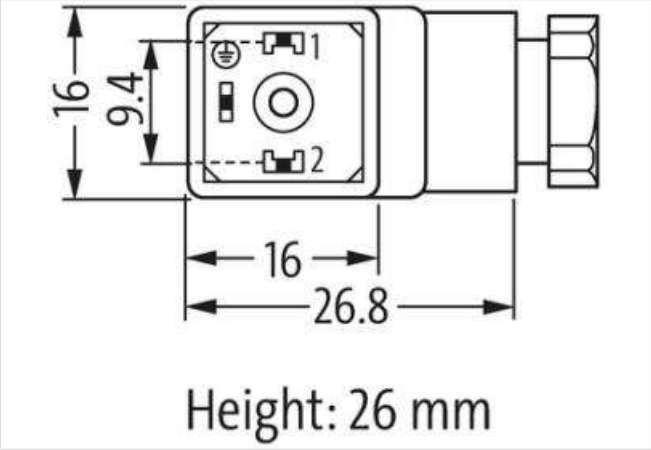

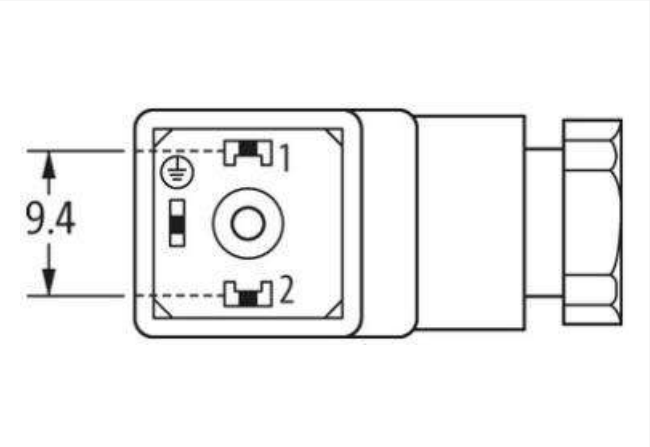

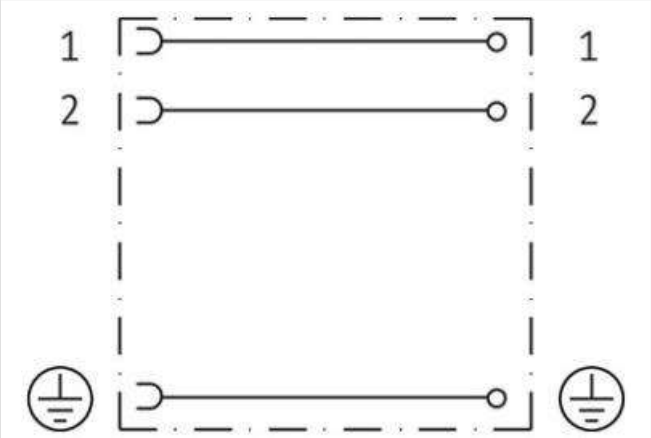

Product may differ from Image

Side 1	
Mounting method	inserted, screwed
Degree of protection (EN IEC 60529)	IP65

Commercial data	
ECLASS-6.0	27279221
ECLASS-6.1	27279221
ECLASS-7.0	27440104
ECLASS-8.0	27440104

The information in this Product-PDF has been compiled with the utmost care.
Liability for the correctness completeness and topicality of the information is restricted to gross negligence. Version: 2024-01-31

MURR ELEKTRONIK
stay connected

ECLASS-9.0	27440105
ECLASS-10.1	27440105
ECLASS-11.1	27440105
ECLASS-12.0	27440105
ETIM-5.0	EC002062
customs tariff number	85366990
GTIN	4048879186971
Packaging unit	1
Electrical data | Supply	
Operating voltage AC max.	250 V
Operating voltage DC max.	250 V
Current operating per contact max.	6 A
Installation	
Connection cross section max.	0,5 mm²
Installation | Connection	
Tightening torque	0,4 Nm
Tightening torque clamping screw	0,2 Nm
Mounting set	M12 x 1.5
Installation | Pin assignment	
No. of poles	2 + PE
Device protection | Electrical	
Additional condition protection degree	inserted, screwed
Mechanical data | Material data	
Material gasket	NBR
Mechanical data | Mounting data	
fastening screw	M3
Clamping range min.	4 mm
Clamping range max.	6 mm
Environmental characteristics | Climatic	
Operating temperature min.	-40 °C
Operating temperature max.	90 °C

The information in this Product-PDF has been compiled with the utmost care.
Liability for the correctness completeness and topicality of the information is restricted to gross negligence. Version: 2024-01-31