Original instructions

Protective stand for Orion Light Guards

Orion Stand xxx



While every effort has been taken to ensure the accuracy of information contained in this book and any associated promotional and information material ABB Jokab Safety cannot accept responsibility for errors or omissions and reserves the right to make any improvements without notice. It is the user's responsibility to ensure that this equipment is correctly designed, specified, installed, cared for and operated to meet all applicable local, national and international codes/regulations. Technical data in our book is correct to the level of accuracy of ABB Jokab Safety´s test procedures as verified by various international approved bodies. Other information (such as application examples, wiring diagrams, operation or use) is intended solely to illustrate the various uses of our products. ABB Jokab Safety does not guarantee or imply that the product when used in accordance with such examples in a particular environment will fulfil any particular safety requirement and does not assume any responsibility or liability for actual use of the product based on the examples given.

ABB Jokab Safety Varlabergsvägen 11, SE-434 39 Kungsbacka, Sweden

www.abb.com/jokabsafety

Overview

General description

The protective stands Orion Stand xxx are housed in extruded aluminium column with a steel base. The base is made of two plates. Their inclination can be adjusted by means of three dowels and their angular position can be adjusted through 3 rough adjustment slots and 3 fine adjustments slots. The Orion protective stands are available in different lengths and compatible with all the Orion Light Guards.

Characteristics

- Protects the AOPD mounted inside it from accidental collisions.
- Single painted extruded aluminium section in different lengths, suitable for all heights of Orion Light Guards.
- Sturdy steel base made of 2 plates with angle reference marks, dowels for adjustment of the vertical axis and slots for angular position adjustment.
- Spirit level to facilitate adjustment of the vertical axis.

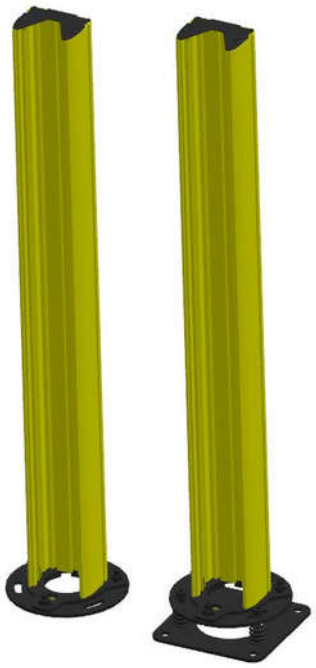

Figure 1 – Orion Stand, with Orion Stand Plate on the right

Mechanical Mounting

The Orion Stand can be used with different Orion products. For this reason, 5 different bracket kits are available:

- ***JSM Orion06:*** 4 brackets for the installation of
  - Orion1 light curtains with protected height from 150 to 1050 mm,
  - Orion2 light grids with protected height 500, 800 and 900 mm.
- ***JSM Orion07:*** 6 brackets for the installation of
  - Orion1 light curtains with protected height from 1200 to 1800 mm,
  - Orion2 light grids with protected height 1200 mm.
- ***JSM Orion08***: 4 brackets for the installation of
  - Orion3 with protected height 500, 800 and 900 mm.
- ***JSM Orion09***: 6 brackets for the installation of
  - Orion3 with protected height 1200 mm.
- ***JSM Orion11:*** for the installation of Orion1 Mirror.

The Orion Stand Plate, available as accessory, is a second plate with compensation springs and can be used to compensate for the effects of collisions, vibrations and uneven floor surfaces.

- ***Orion Stand Plate:*** for the installation of a double plate with compensation springs.

Mounting

Using the appropriate brackets for the model and the appropriate number of brackets for the length of the AOPD (see above), build sub-assemblies as shown in Figure 2.

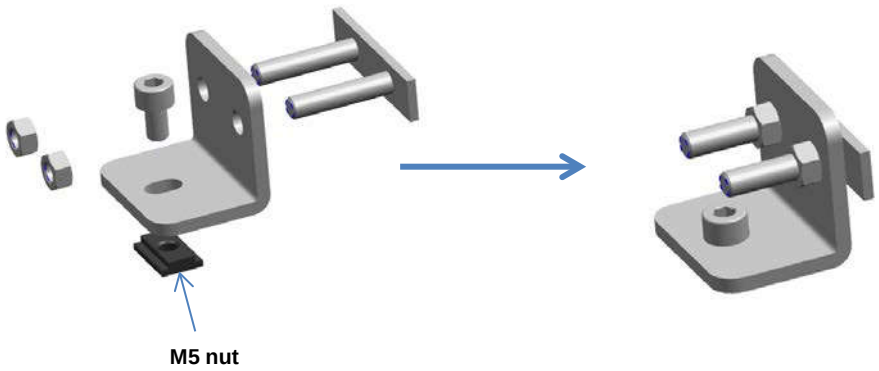

Figure 2 – Bracket assembly

Then insert and fasten them to the grooves on the AOPD. Do not tighten completely the M5 nut under the bracket (in the following example Orion1 Base profile is used).

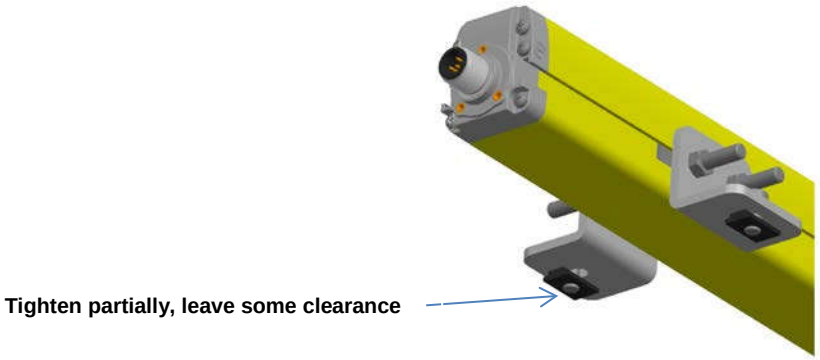

Figure 3

Once the assembly is completed, remove the column cover by unscrewing the two M8x20 ISO 7380 screws (Figure 3) and insert the assembly in the internal guides.

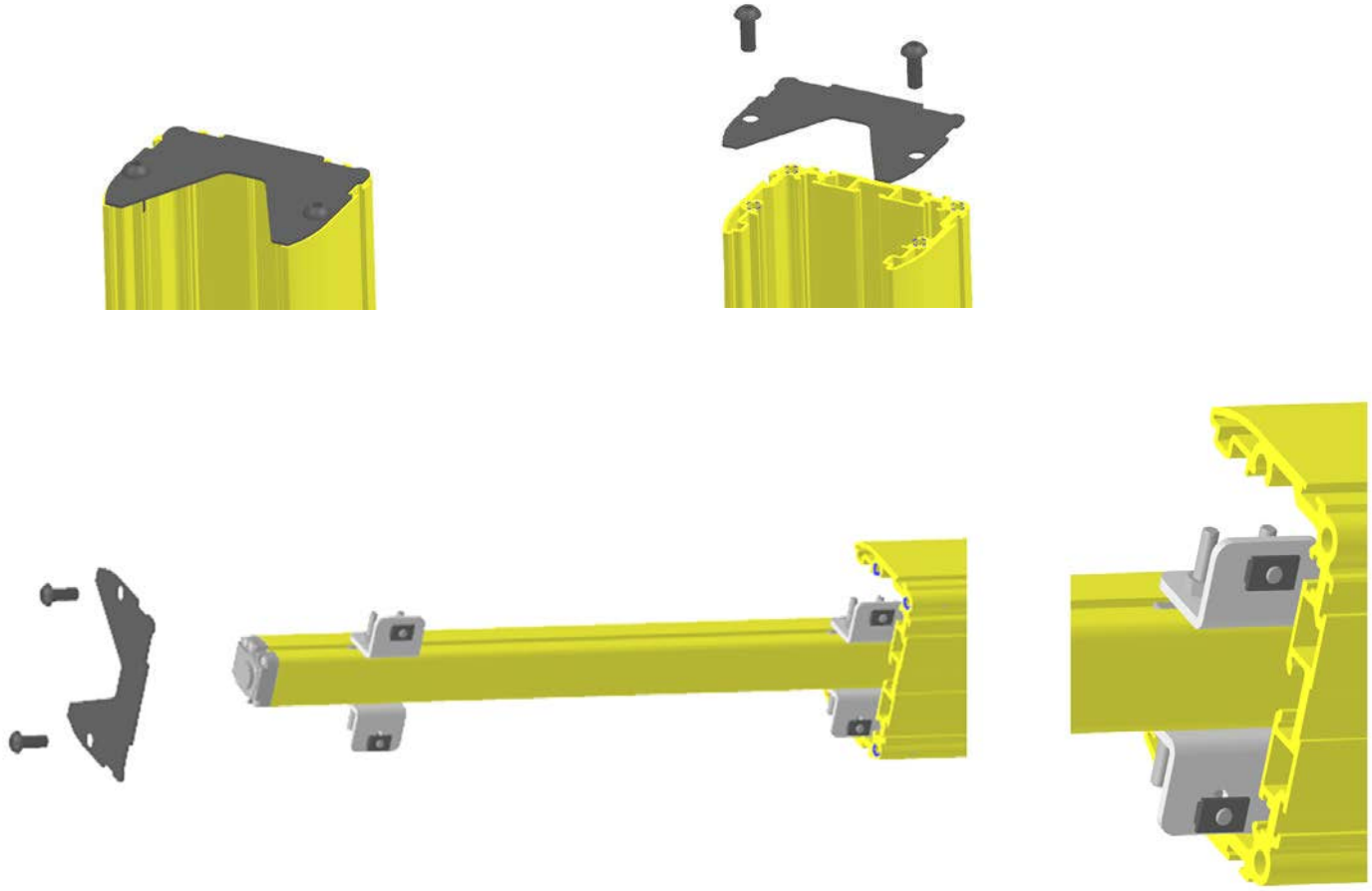

Figure 4

Once the product has been completely inserted and its position along the column adjusted, put back the cover (Figure 4).

To adjust the position of the product along the column, slightly unscrew the M5x8 UNI 5931 screws, which can be accessed from the outside by using a special Allen key. If the column is in a vertical position, make sure that the product does not slide accidentally towards the bottom.

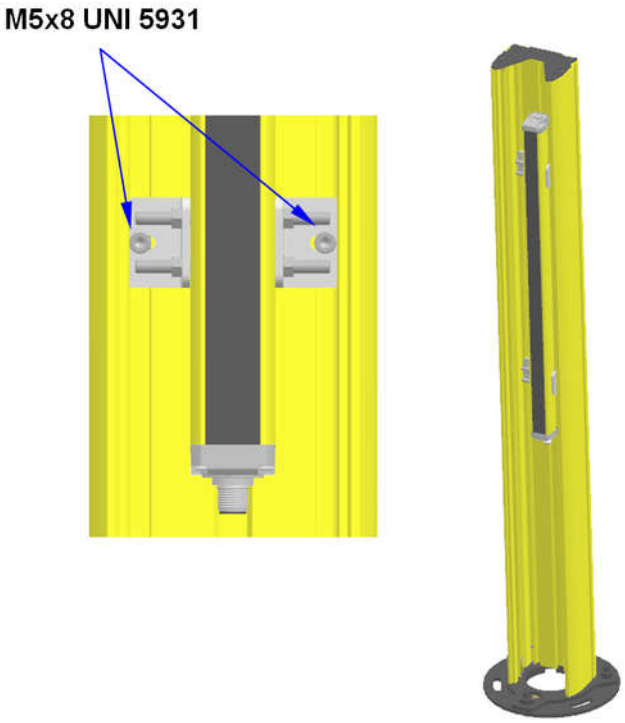

Figure 5 – Orion1 Base in an Orion Stand



Figure 6 – Orion3 in an Orion Stand

Orion1 Mirror mounting

An Orion1 Mirror is mounted in an Orion Stand using the mounting kit JSM Orion11. Make sure that the M8 T-nut is aligned with the corresponding central groove of the protective stand and that the side edges of the mirror are aligned with the corresponding longitudinal guides in the protective stand (Figure 6). Adjust the height in the protective stand, then tighten the M8x50 UNI 5931 screws.

Tighten the M8 UNI 5588 nut under the eyelet of the frame of the mirror to avoid accidental unfastening.

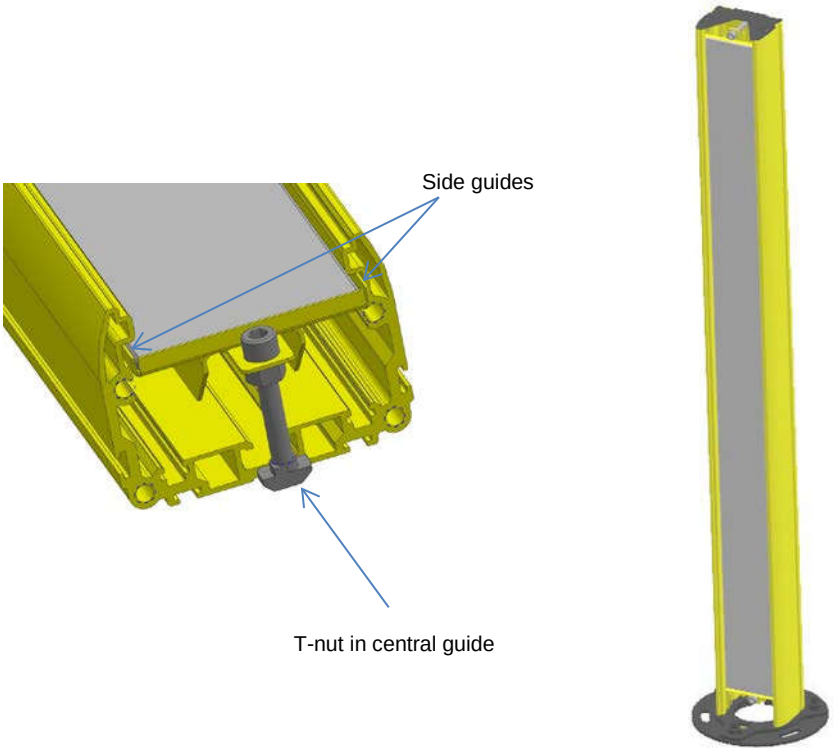

Figure 7

Mounting of the Orion Stand Plate

Fasten the plate to the floor with the screws and insert the 3 load-bearing springs on the spacers on the plate. Place the column on the springs so that the slots in the bottom plate are aligned with the springs. Insert the M10 UNI 5931 screws and washers, provided with the Orion Stand Plate, in the slots and tighten them while gradually pressing down upon the 3 load-bearing springs. During this phase the vertical axis can also be adjusted.

Use the spirit level as a reference and choose the rough angular position using the slots and the reference marks on the bottom plate. The optimal working height for the load-bearing springs (which corresponds to the distance between the fixed plate and the bottom plate) is approximately 42 mm. Once it rests on a level surface and the maximum angular position has been established, it is possible to perform a fine adjustment of the angular position by working on the dowels and the lock nuts of the moulded plate (Figure 8).

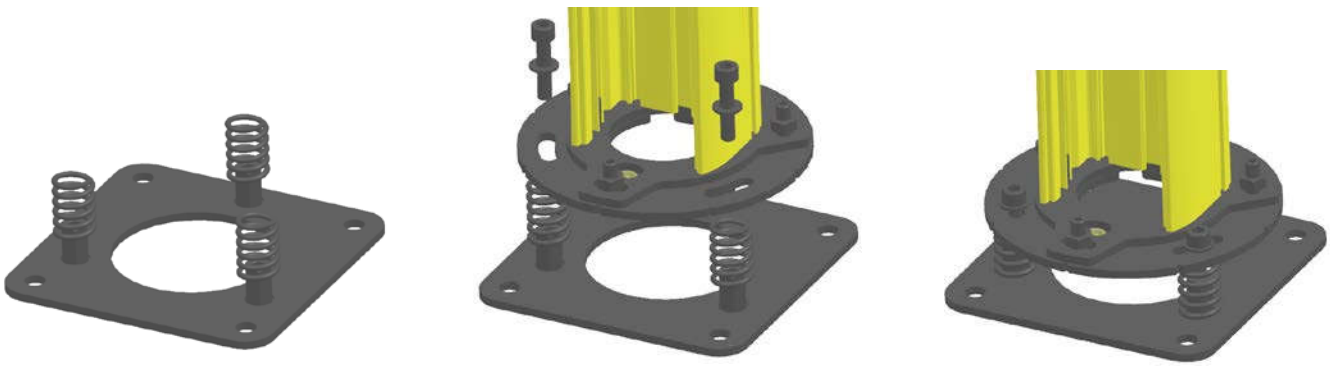

Figure 8 – Mounting of the Orion Stand Plate

Adjustment

Adjusting the vertical axis and the angular position of the plates

Fasten the plate to the floor in the desired rough angular position, according to the positions established by the reference grooves (main angles: 0° - 45° - 90° for each quadrant); to do this, use the 3 slots on the bottom plate and M10 screws. Do not tighten the M10 screws completely. Unfasten the lock nuts on the dowels, then use the dowels to adjust the inclination. During this operation, use the spirit level as a reference. Once the desired inclination is obtained, tighten the screws to the floor. If necessary, proceed to a further adjustment by rotating the moulded plate to the desired position, then tighten the lock nuts on the dowels (Figure 9).

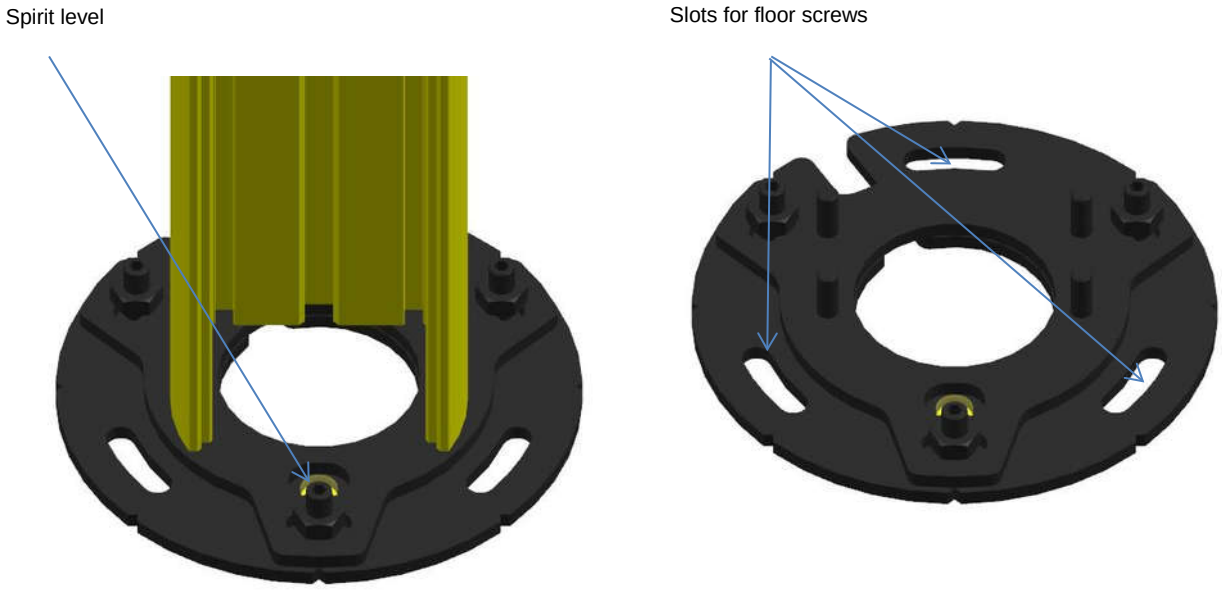

Figure 9 - Adjusting the vertical axis and the angular position of the plates

Installation

⚠ **Warning!** The minimum installation distance must be respected. For more information about its calculation, please refer to the paragraph “Use of deviating mirrors “ of the instruction manual the AOPD or EN ISO 13855:2010.

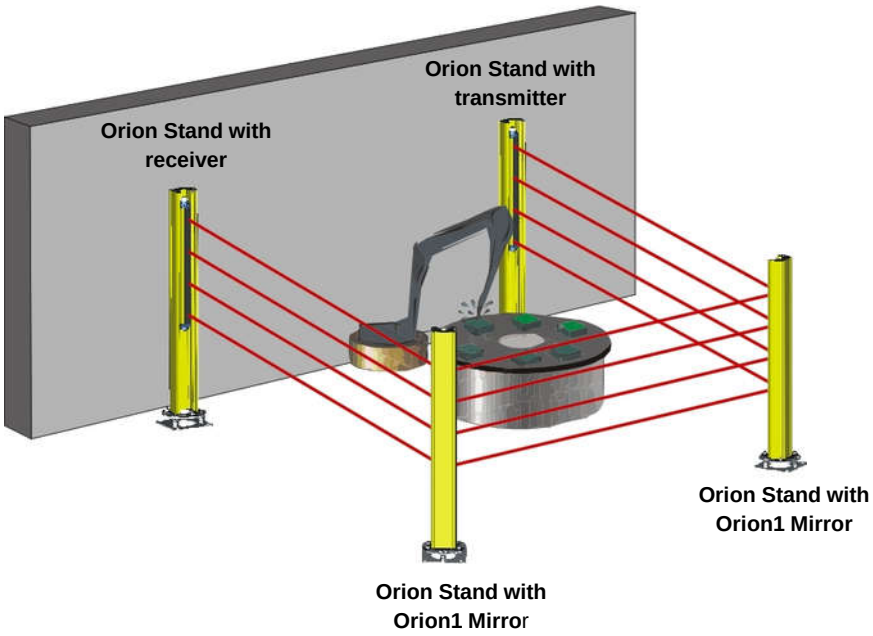

Figure 10 - An area protection system composed of an AOPD, transmitter and receiver, and two deviating mirrors

1. Define the area to protect and the precise positions where the deviating mirrors and the transmitter and the receiver will be installed.
2. Place the floor stands in the desired positions. Fasten them (or the Orion Stand Plates) to the floor and make sure that their axes are perpendicular to the floor. Use the provided spirit level to fine adjust their inclination if necessary.
3. Orientate the mirrors to about 45° with respect to the optical path. The protective stands guarantee an adjustment interval around the vertical axis of about ±5° once secured to the floor.
4. Insert the Orion Laser pointer in the upper part of the transmitter and orientate the transmitter so that the laser beam hits the surface of the first mirror in a central point of the vertical axis and at the same height at which the pointer is installed.
5. Repeat the same procedure inserting the pointer in the lower part of the transmitter. If necessary, repeat these procedures until the desired result is achieved.
6. Orientate the first mirror so that the laser beam hits the second mirror as described above.
7. For the angular adjustment,
   - if the Orion Stand Plate is not being used, see the section "Adjusting the vertical axis and the angular position of the plates".
   - if the Orion Stand Plate is being used, see the section “Mounting of the Orion Stand Plate“.

NB: It might be necessary to carry out small adjustments to the alignment of the two units of the AOPD by following the regular Alignment procedure described in the Instruction Manual of the AOPD. We do NOT recommend to make any further changes to the position of the mirrors, as the laser beam guarantees their perfect alignment.

Model overview

Orion Stand

Type	Article number	Description
Orion Stand 060	2TLA022312R0000	Orion Protective stand H = 600 mm
Orion Stand 100	2TLA022312R0100	Orion Protective stand H = 1000 mm
Orion Stand 120	2TLA022312R0200	Orion Protective stand H = 1200 mm
Orion Stand 165	2TLA022312R0300	Orion Protective stand H = 1650 mm
Orion Stand 190	2TLA022312R0400	Orion Protective stand H = 1900 mm

Accessories

Type	Article number	Description
JSM Orion06	2TLA022310R0400	Orion1/2 - Mounting kit in protective stand (4 brackets)
JSM Orion07	2TLA022310R0500	Orion1/2 - Mounting kit in protective stand (6 brackets)
JSM Orion08	2TLA022310R0600	Orion3 - Mounting kit in protective stand (4 brackets)
JSM Orion09	2TLA022310R0700	Orion3 - Mounting kit in protective stand (6 brackets)
JSM Orion11	2TLA022310R0900	Orion1 Mirror - Mounting kit in protective stand
Orion Stand Plate	2TLA022312R5000	Orion Plate kit for protective stand

Dimensions

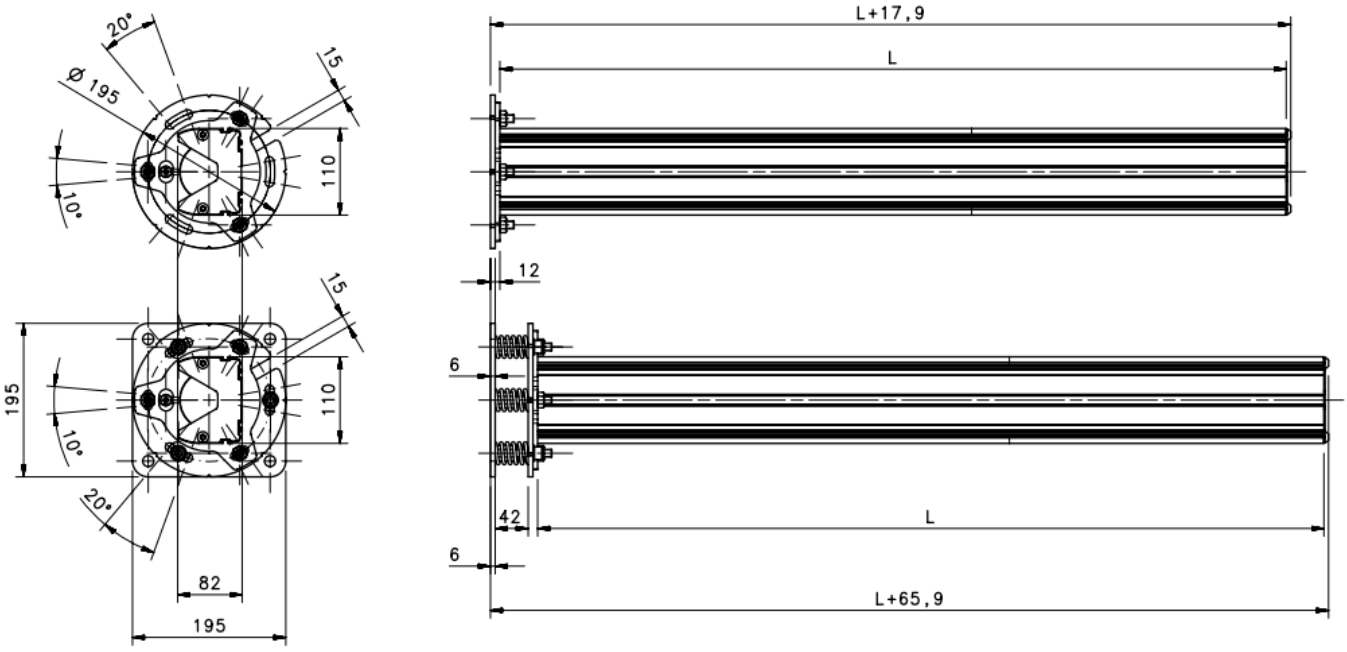

NB: All dimensions in millimetres.

Model	Article number	L (mm)
Orion Stand 060	2TLA022312R0000	600
Orion Stand 090	2TLA022312R0100	1000
Orion Stand 120	2TLA022312R0200	1200
Orion Stand 165	2TLA022312R0300	1650
Orion Stand 190	2TLA022312R0400	1900