OGE103

Through-beam sensor receiver

OGE-HNKG/US

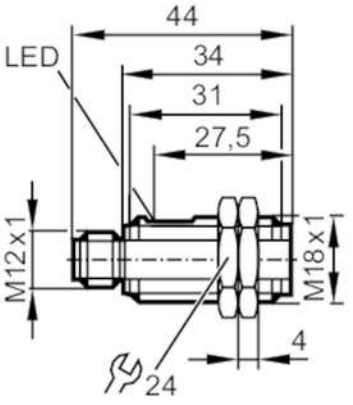

Product characteristics		
Type of light		red light
Housing		threaded type
Application		
Function principle		Through-beam sensor
Electrical data		
Operating voltage	[V]	10...30 DC
Current consumption	[mA]	8
Protection class		III
Reverse polarity protection		yes
Type of light		red light
Outputs		
Electrical design		NPN
Output function		light-on mode
Max. voltage drop switching output DC	[V]	2.5
Permanent current rating of switching output DC	[mA]	200
Switching frequency DC	[Hz]	1000
Short-circuit protection		yes
Overload protection		yes
Detection zone		
Transmitter / receiver		receiver
Range	[m]	< 8
Range adjustable		no
Operating conditions		
Ambient temperature	[°C]	-25...60
Protection		IP 67; (in conjunction with a corresponding connector)
Tests / approvals		
EMC		EN 60947-5-2

OGE103

Through-beam sensor receiver

OGE-HNKG/US

MTTF	[years]	1320	
Mechanical data			
Weight	[g]	14.7	
Housing		threaded type	
Dimensions	[mm]	M18 x 1 / L = 44	
Thread designation		M18 x 1	
Materials		housing: ABS	
Lens material		PMMA	
Displays / operating elements			
Display		switching status	1 x LED, yellow
Accessories			
Items supplied		lock nuts: 2	
Remarks			
Pack quantity		1 pcs.	

Electrical connection

Connector: 1 x M12; coding: A



Connection

