REVISION					
ZONE	REV	DESCRIPTION	DATE	CHANGED BY	APPROVED
	C	ECO-14591	05/30/2025	KGLEBOVA	DWANG

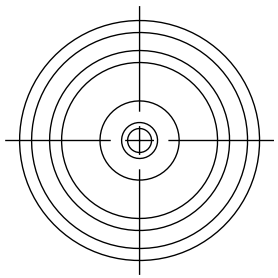

TNC JACK

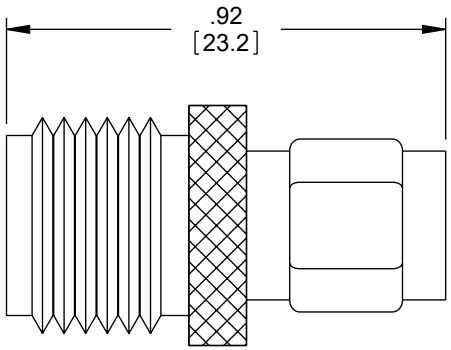

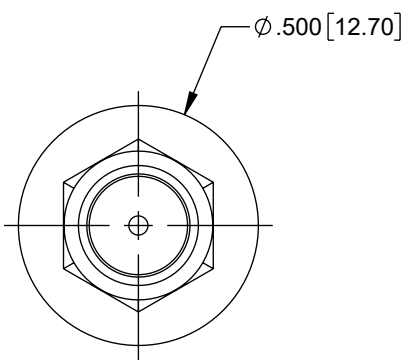

SMA PLUG

NOTES:
1. MATERIALS:
   SHELL: BRASS.
   CONTACTS: BRASS.
   INSULATOR: TEFLON.
   CENTER PIN: BRASS.
2. FINISH:
   SHELL: NICKEL PLATE.
   CONTACT: NICKEL PLATE.
   CENTER PIN: GOLD PLATE.
3. ELECTRICAL:
   FREQUENCY RANGE: DC TO 3 GHz.
4. COMPONENT SHALL BE INDIVIDUALLY PACKAGED IAW L-COM SPECIFICATION PS-0031.

REGULATORY COMPLIANCE:
EU RoHS DIRECTIVE (MOST RECENT RELEASED VERSION).

THE INFORMATION CONTAINED IN THIS DRAWING IS THE SOLE PROPERTY OF INFINITE ELECTRONICS, INC. ANY REPRODUCTION IN PART OR WHOLE WITHOUT THE WRITTEN PERMISSION OF INFINITE ELECTRONICS, INC. IS PROHIBITED. THESE COMMODITIES, TECHNOLOGY OR SOFTWARE WERE EXPORTED FROM THE UNITED STATES IN ACCORDANCE WITH THE EXPORT ADMINISTRATION REGULATIONS. DIVERSION CONTRARY TO U.S. LAW PROHIBITED.

UNLESS OTHERWISE SPECIFIED
LEADING DIMENSIONS ARE INCHES
DIMENSIONS IN [ ] ARE MILLIMETERS

TOLERANCES:

.X = ±.2 [5]	FRACTIONS
.XX = ±.02 [0.5]	± 1/32
.XXX = ±.005 [0.13]	ANGLES ± 1°

CABLE LENGTH TOLERANCES:
≤12 [305] = +1 [25] / -0
>12 [305] ≤ 60 [1524] = +2 [51] / -0
>60 [1524] ≤ 120 [3048] = +4 [102] / -0
>120 [3048] ≤ 300 [7620] = +6 [152] / -0
>300 [7620] = +5% / -0

ALL DIMENSIONS ARE FOR REFERENCE ONLY AND SUBJECT TO CHANGE WITHOUT NOTICE.
UN-DIMENSIONED/NON-CRITICAL FEATURES MAY VARY IN SIZE AND LOCATION
COLORS MAY VARY

L-com®
an INFINITE brand
Website: www.L-com.com
Phone: 1.800.341.5266 | 1.978.682.6936

INTERPRET ALL DIMENSIONS AND TOLERANCES PER ASME Y14.5

SCALE	SHEET
NONE	1 OF 1

DESCRIPTION: SMA PLUG TO TNC JACK

SIZE	CAGE CODE	DRAWN BY	ITEM NO.	REV
A	43321	MCCORMICK	BA580	C

LC LG Rev-D5 Asize