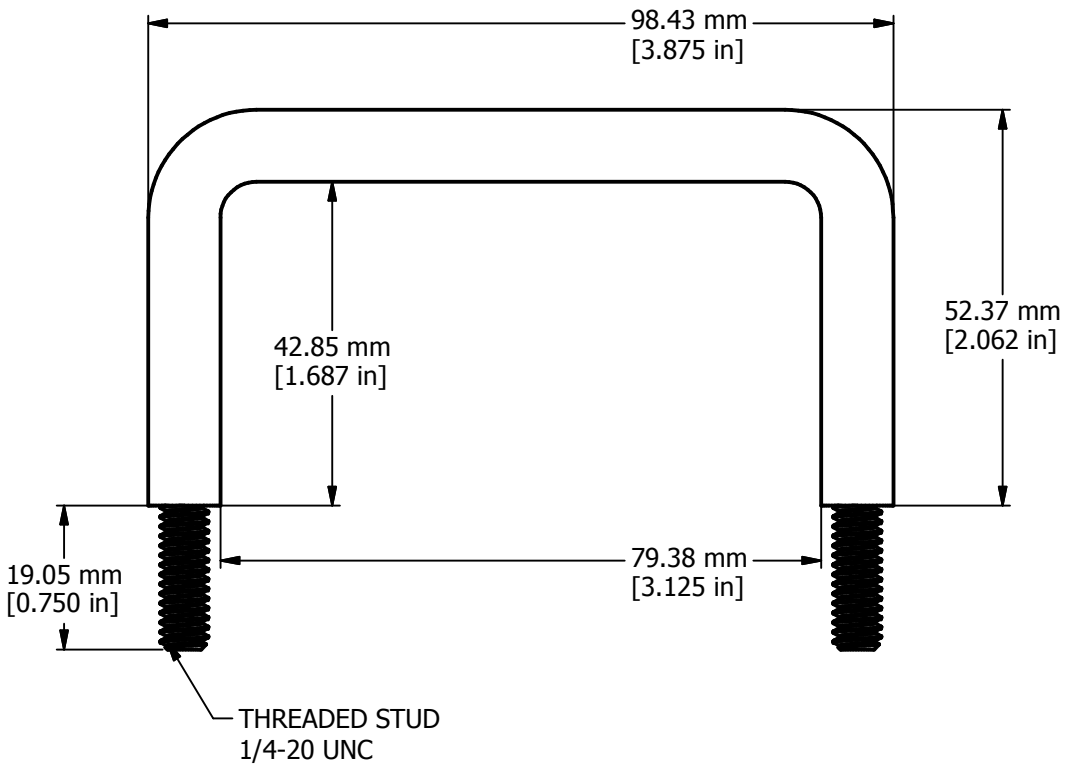

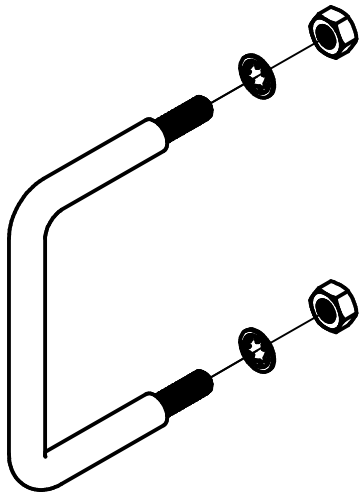

TYPICAL HANDLE ASSEMBLY

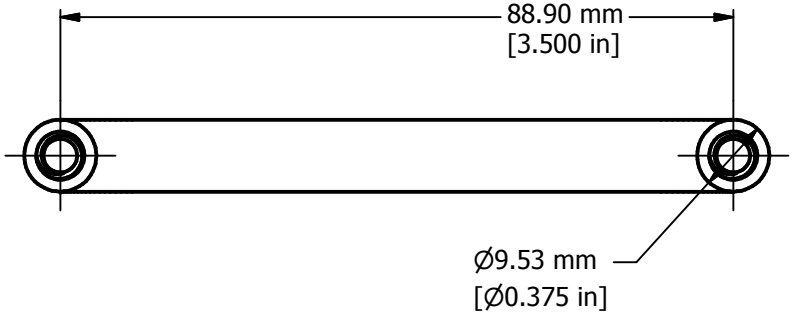

1427N3
Handle Material - CR Steel
Finish - Bright Chrome Plated
Hardware
2 Nuts - 1/4-20 Thread
2 Internal Tooth Lockwashers
**note handle sold singly

HAMMOND MANUFACTURING™

1427N3