- **Port size: G1/8**
- **Long established and well-proven valves**
- **Compact size**
- **Normally closed and normally open models**
- **May also be used as 2/2 valves**



Technical features

Medium:
Compressed air, filtered, lubricated and non-lubricated or hydraulic fluid
Operation:
Poppet valves, directly actuated
Mounting:
Through-holes in valve body

Operating pressure:
2 ... 10 bar (29 ... 145 psi)
Port size:
G1/8
Ambient/Media temperature:
-20 ... +80°C max. (-4 ... +176 °F)
Air supply must be dry enough to avoid ice formation at temperatures below +2°C (+35°F).

Flow (to CETOP RP50P):

	l/min	Cv
S/666/..	174	0,20
S/667/..	156	0,18

Others:
For use as a 2/2 valve the main supply must be connected to port '1' and the exhaust port 3' should be plugged.

Materials:
Body: Diecast zinc alloy
Piston: aluminium
Seals: NBR

Technical data
3/2 mechanical valves

Symbol	Port size	Function	Operator/Return	Operating pressure (bar)	Operating force or torque at 6,3 bar	Weight (kg)	Spares Kit	Dimension No.	Model
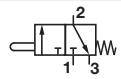	G1/8	NC	Plunger/Spring	2 ...10	35 N	0,20	QS/666/1/00	1	S/666/14
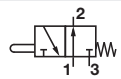	G1/8	NO	Plunger/Spring	2 ...10	72 N	0,20	QS/667/1/00	1	S/667/14
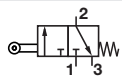	G1/8	NC	Roller/Spring	2 ...10	20 N	0,30	QS/666/1/00	2	S/666/8
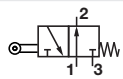	G1/8	NO	Roller/Spring	2 ...10	40 N	0,30	QS/667/1/00	2	S/667/8
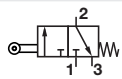	G1/8	NC	Roller/Spring	2 ...10	0,25 Nm	0,30	QS/666/1/00	3	S/666/108
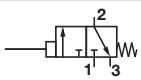	G1/8	NC	Rod/Spring	2 ...10	0,25 Nm	0,30	QS/666/1/00	4	S/666/106
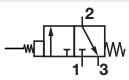	G1/8	NC	Antenna/Spring	2 ...10	0,25 Nm	0,30	QS/666/1/00	5	S/666/116

3/2 manual valves

Symbol	Port size	Function	Knob colour	Operator/ Return	Operating pressure (bar)	Operating force or torque at 6,3 bar	Weight (kg)	Spares Kit	Dimension No.	Model
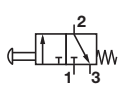	G1/8	NC	Silver	Knob/spring	2 ...10	35	0,20	QS/666/1/00	7	S/666/1
	G1/8	NC	Black	Knob/spring	2 ...10	35	0,20	QS/666/1/00	7	S/666/1N
	G1/8	NC	Red	Knob/spring	2 ...10	35	0,20	QS/666/1/00	7	S/666/1R
	G1/8	NC	Green	Knob/spring	2 ...10	35	0,20	QS/666/1/00	7	S/666/1G
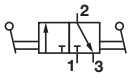	G1/8	NC	—	Lever/lever (Panel mounting)	2 ...10	14	0,30	QS/666/1/00	8	S/666/7
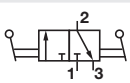	G1/8	NC	—	Lever (long)/lever (Panel mounting)	2 ...10	10	0,30	QS/666/1/00	6	S/666/117

Our policy is one of continued research and development. We therefore reserve the right to amend, without notice, the specifications given in this document. (1999 - 5070e) © 2015 Norgren Ltd.

Dimensions

Dimensions in mm
Projection/First angle

1

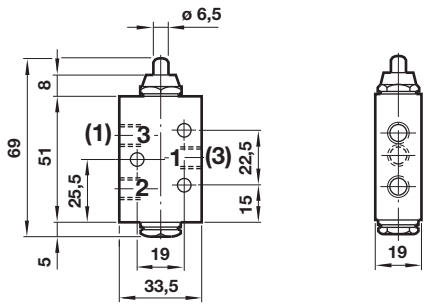

Pre-travel: 0,8 mm closed top seat
Operating Travel: 0,8 mm open bottom seat
Over-travel: 1,5 mm
Model number S/667/14 type 3/2 normally open numbers are shown in brackets.

2

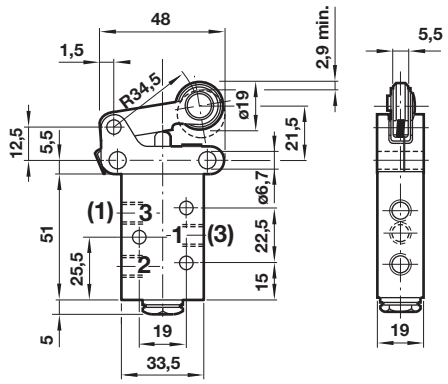

Pre-travel: 1,4 mm closed top seat
Operating Travel: 1,4 mm open bottom seat
Over-travel: 2,2 mm
Model number S/667/8 type 3/2 normally open numbers are shown in brackets.

3

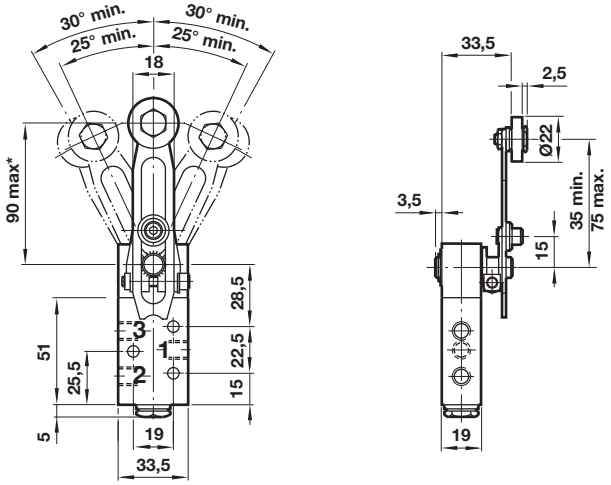

Mechanism may be operated either side of centre line.
When the valve is mounted horizontally, the roller is recommended to be positioned on the upper face of the arm.
*Alternative position

4

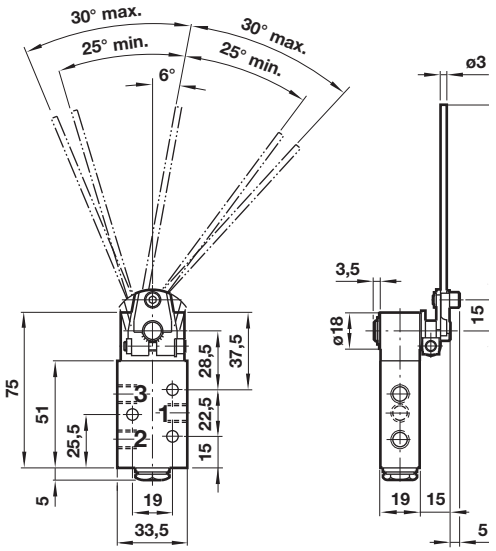

Mechanism may be operated either side of centre line.
*Recommended

Our policy is one of continued research and development. We therefore reserve the right to amend, without notice, the specifications given in this document. (1999 - 5070e) © 2015 Norgren Ltd.

5

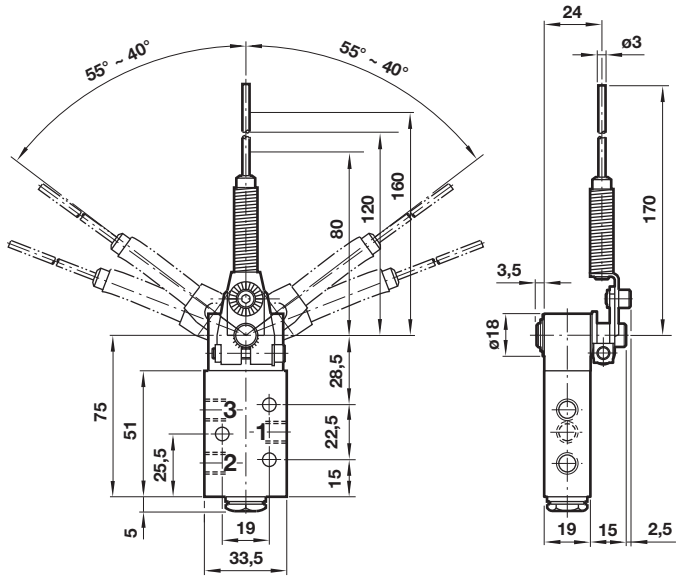

*Rotation at Point of Application: 40° minimum @ 80 mm
50° minimum @ 120 mm
55° minimum @ 160 mm
Mechanism may be operated either side of centre line.

6

Dimensions in mm
Projection/First angle

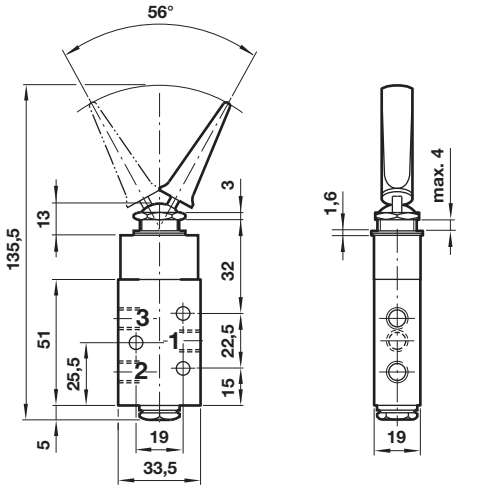

Panel hole: ø 16 mm
Panel thickness: 4 mm maximum

7

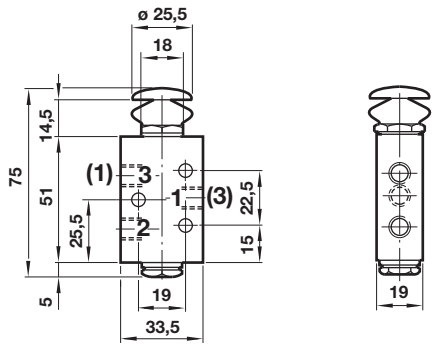

8

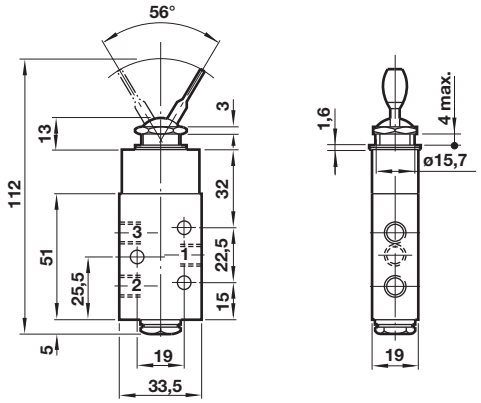

Panel hole: ø 16 mm
Panel thickness: 4 mm maximum

Warning

These products are intended for use in industrial compressed air systems only. Do not use these products where pressures and temperatures can exceed those listed under **»Technical features/data«**.
Before using these products with fluids other than those specified, for non-industrial applications, life-support systems or other applications not within published specifications, consult IMI Precision Engineering, Norgren GmbH.
Through misuse, age, or malfunction, components used in fluid power systems can fail in various modes.

The system designer is warned to consider the failure modes of all component parts used in fluid power systems and to provide adequate safeguards to prevent personal injury or damage to equipment in the event of such failure.
System designers must provide a warning to end users in the system instructional manual if protection against a failure mode cannot be adequately provided.
System designers and end users are cautioned to review specific warnings found in instruction sheets packed and shipped with these products.

Our policy is one of continued research and development. We therefore reserve the right to amend, without notice, the specifications given in this document. (1999 - 5070e) © 2015 Norgren Ltd.