ID0016

Inductive sensor

ID-2050-ABOA/6M

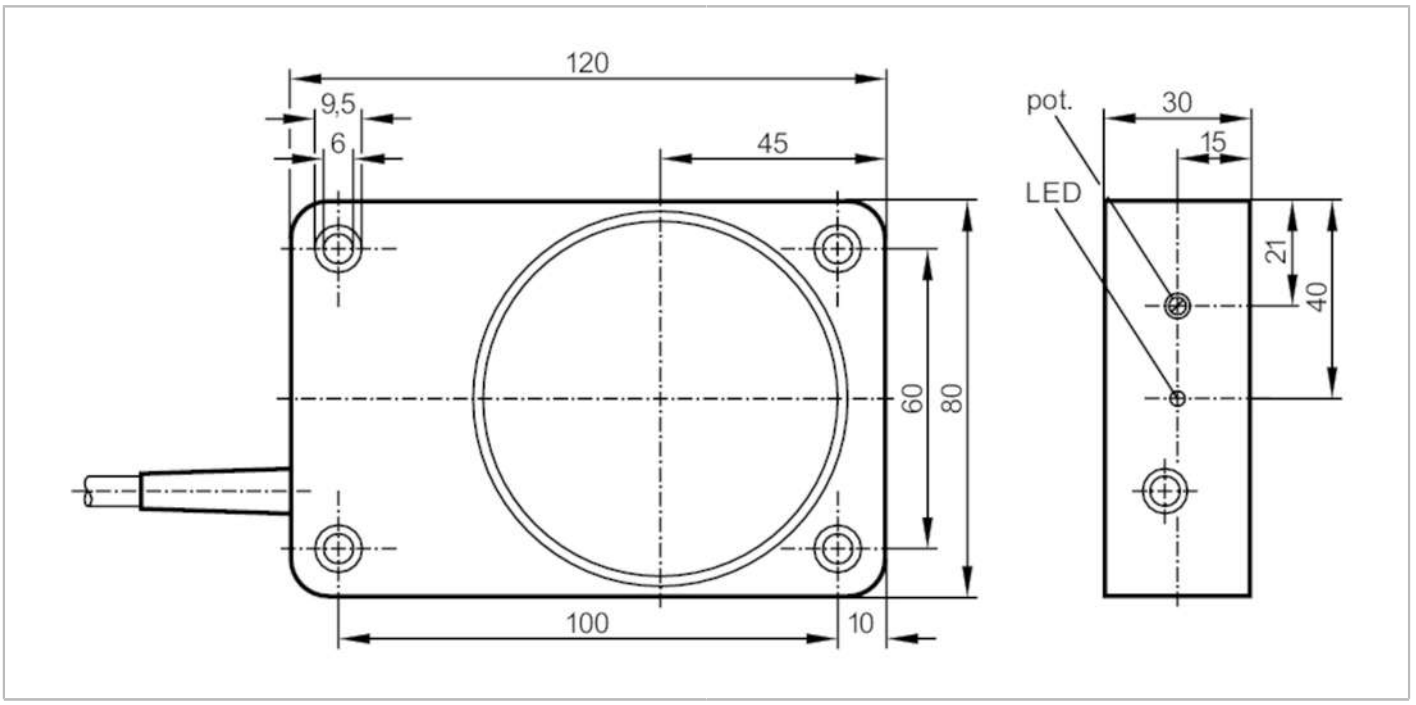

Product characteristics		
Output function		normally open
Sensing range	[mm]	50
Housing		rectangular
Dimensions	[mm]	120 x 80 x 30
Electrical data		
Operating voltage	[V]	20...250 AC/DC
Protection class		II
Reverse polarity protection		no
Outputs		
Output function		normally open
Max. voltage drop switching output DC	[V]	5
Max. voltage drop switching output AC	[V]	5.5
Minimum load current	[mA]	5
Max. leakage current	[mA]	2.5 (250 V AC) / 1.3 (110 V AC) / 0.8 (24 V DC)
Permanent current rating of switching output AC	[mA]	250; (350 (...50 °C))
Permanent current rating of switching output DC	[mA]	100
Short-time current rating of switching output	[mA]	2200; (20 ms / 0,5 Hz)
Switching frequency AC	[Hz]	25
Switching frequency DC	[Hz]	35
Short-circuit proof		no

ID0016

Inductive sensor

ID-2050-ABOA/6M

Overload protection		no	
Detection zone			
Sensing range	[mm]	50	
Sensing range adjustable		yes	
Factory setting sensing range	[mm]	50	
Real sensing range Sr	[mm]	50 ± 10 %	
Operating distance	[mm]	0...40.5	
Accuracy / deviations			
Correction factor		steel: 1 / stainless steel: 0.7 / brass: 0.4 / aluminium: 0.3 / copper: 0.2	
Hysteresis	[% of Sr]	1...15	
Switch point drift	[% of Sr]	-10...10	
Operating conditions			
Ambient temperature	[°C]	-25...80	
Protection		IP 65	
Tests / approvals			
EMC		EN 60947-5-2	
		EN 55011	class B
MTTF	[years]	512	
Mechanical data			
Weight	[g]	733	
Housing		rectangular	
Mounting		non-flush mountable	
Dimensions	[mm]	120 x 80 x 30	
Materials		PPE modified	
Displays / operating elements			
Display		switching status	1 x LED, yellow
Electrical connection			
Required protection		miniature fuse to IEC60127-2 sheet 1; ≤ 2 A; fast acting	
Accessories			
Items supplied		screwdriver: 1	
Remarks			
Remarks		Recommendation: Check the safe functioning of the unit after a short circuit.	
Pack quantity		1 pcs.	

ID0016

Inductive sensor

ID-2050-ABOA/6M

Electrical connection

Cable: 6 m, PVC; 2 x 0.5 mm²

Connection

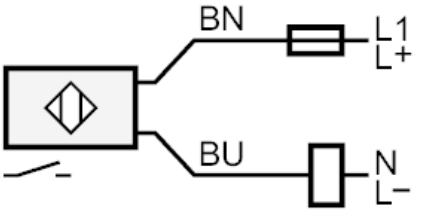

Note miniature fuse to IEC60127-2 sheet 1 ≤ 2 A fast acting
Core colours :

BN =	brown
BU =	blue