BOS R020K-PS-RF11-02
Order code: BOS020K

Photoelectric sensor
Series R020K
Light scanner, triangulation
Sn = 30 mm

DC, direct current
PNP (1x)
NO: light-on
800 Hz
LED, red light

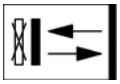

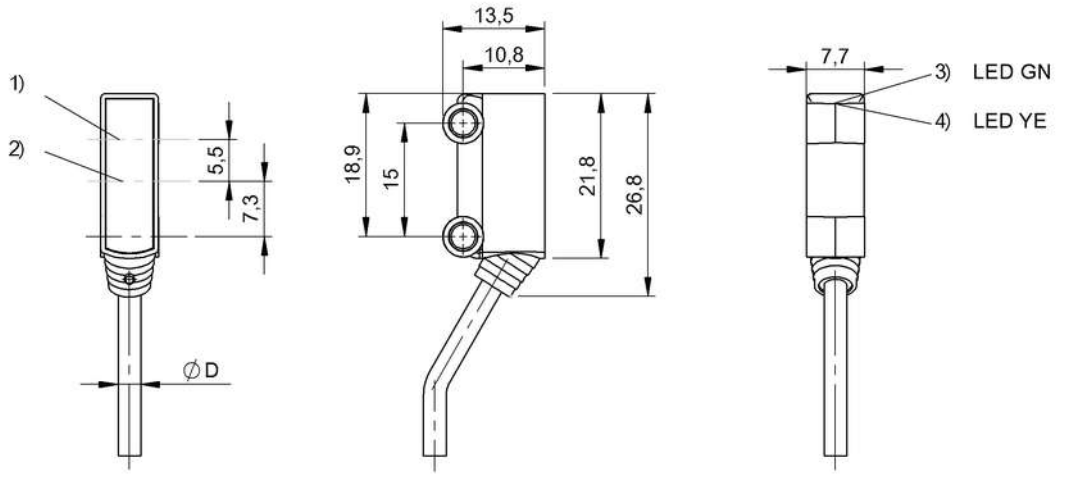

1) Optical axis receiver 2) Optical axis emitter 3) Power 4) Light reception

Basic data

Operating voltage UB DC	10.0 V... 30.0 V
Eff. operating voltage Ue DC	24.0 V
Ripple max. (% of Ue)	20 %
No-load current max. Io at Ue	20 mA
Polarity reversal protected	yes
Protection Class	III
Rated insulation voltage Ui	50 V DC
Indicator	Power - LED GN Light receipt - LED YE
Ambient temperature Ta	-25 °C... 50 °C

Optical data

Principle of optical operation	Light scanner, triangulation
Optical special feature	Background suppression
Erfassungsbereich Sd	1...30 mm
Light type	LED, red light
Wavelength	660 nm
Light spot size, typical	Ø3 mm at 15 mm
Ambient light max.	5,000 Lux

Electrical data

Eff. operating distance Sr	30 mm
Minimum operating distance	1 mm
Switching output	PNP (1x)
Switching function	NO
Eff. operating current Ie	50 mA
Switching freq. f max. (at Ue)	800 Hz
Turn on time ton max.	0.63 ms
Turn off time toff max.	0.63 ms
Voltage drop Ud max. (at Ie)	2.5 V
Short circuit protected	yes

Mechanical data

Style	Block, 60° connection
Dimensions	7.7 mm x 13.5 mm x 26.8 mm
Mounting type	Screw M3
Housing material	ABS
Werkstoff aktive Fläche	PMMA
Degree of protec. per IEC60529	IP67
Connection type	Cable
Cable diameter D max.	2.4 mm
Cable length	2.00 m
Number of conductors	3
Conductor cross-section	0.09 mm²
Cable jacket material	PVC

Approval

Approvals / Conformity	CE cULus

Remarks

Basic standard	IEC 60947-5-2

The sensor is functional again after the overload has been eliminated.
Reference object (target): Gray card, 100 x 100
90 % remission, axial approach.
For additional information, refer to user's guide.
Order accessories separately.

00000000000/243215/00000000

www.balluff.com
Balluff Germany: +49 7158 173-0, +49 7158 173-370
Balluff USA: +1-800-543-8390
Balluff China: +86 21 5089 9970

BOS R020K-PS-RF11-02
Order code: BOS020K

BALLUFF
sensors worldwide

Photoelectric sensor
Series R020K
Light scanner, triangulation
Sn = 30 mm

DC, direct current
PNP (1x)
NO: light-on
800 Hz
LED, red light

IND. CONT. EQ. 4R97 for use in the secondary of a class 2 source of supply

Definitions see general catalog

Subject to change without notice.

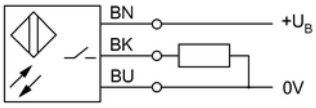

000000000000/243215/00000000