SGD 24-M420

Current Loop Indicator PanelPilot Compatible Smart Graphics Display

Features

- 2.4” colour TFT screen
- Use PanelPilot software, to setup and customise the display. Compatible with Windows 7, 8.1 and 10.
- Multiple configurations included free
- Programmable via the USB interface
- Simple panel mounting solution
- Operating voltage of 4V-30V d.c. (see note)
- Measures 4 - 20mA current loop (also 10-50mA or 0-50mA possible)
- Digital hold



The SGD 24-M is a PanelPilot Compatible graphics display with a 320 x 240 pixel (QVGA) colour display and USB programming interface.

Using the PanelPilot software (available for Windows 7, 8.1 and 10), users are able to choose from an ever-increasing number of configurations (six voltmeters at launch) which can then be customised to their needs.

Colours, text labels, splash screen and input scaling can all be customised by the user through the software and then uploaded to the SGD 24-M through the USB connection.

Panel or enclosure installation of the display is simple, using a panel fixing clip to mount the display, and 4 screw terminals to connect the inputs.

Note: Requires fully floating PSU with respect to current loop

Specifications

	Minimum	Typical	Maximum	Unit
Accuracy		0.05	0.1	%
Linearity			±1*	Count
Sample rate		3		Samples / second
Operating temperature range	0 (+32)		+40 (+104)	°C (°F)
Supply voltage	4		30	V d.c.
Supply current **	35		190	mA
Measurement range	0	4-20	50	mA
Loop volt drop	0	0.4-2.0	5.0	V

* Depending on user calibration settings

** Voltage dependent. See graph on Page 2.

Ordering Information

Standard Display (Panel meter, fixing kit, quick start guide)	**SGD 24-M420**
USB Cable (Type A to mini-B)	**CABLE USB A-MF**
USB Power Supply UK Plug	**PSU-5VDC-USB-UK**
USB Power Supply USA Plug	**PSU-5VDC-USB-USA**

SGD 24-M420

Current Loop Indicator PanelPilot Compatible Smart Graphics Display

Hardware

Screw Terminal Functions

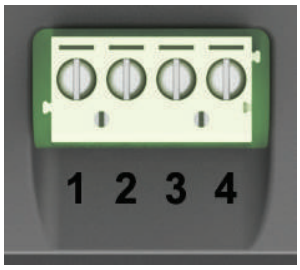

1 NC Do not connect
2 I+ Positive connection from current loop
3 I- Negative connection to current loop, and 0V power supply return
4 V+ Positive power supply connection (4V – 30V d.c.)

Typical Supply Current

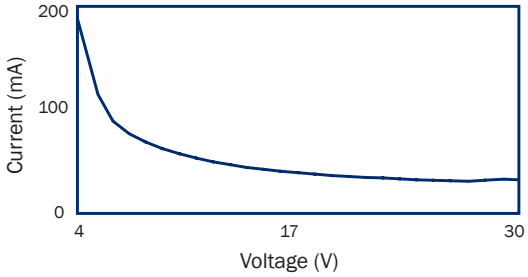

USB connection

A 'Type A to Mini-B' USB cable is required to program and customise the SGD 24-M. It typically takes 10 seconds to send a configuration, with an additional 5 seconds needed for the hardware to reset.

The SGD 24-M can be powered directly from USB and is compatible with both USB 1.1 and USB 2.0. The screw terminals and advanced connector can remain connected whilst using USB, but it is not necessary for V+ to be powered.

A USB power supply is available - PSU-5VDC-USB-UK (UK plug format) or PSU-5VDC-USB-USA (USA plug format). This may be used as a convenient means to provide a fully floating power supply for the loop indicator.

Display

The display is a 2.4" TFT panel, with a resolution of 320 x 240 pixels and a 16-bit color depth. Any graphics that are uploaded to the meter are automatically converted to this specification. A resistive touchscreen is fitted, for use with supporting applications. Clean the screen with a damp, soft, lint free cloth.

Panel Mounting

The SGD 24-M can be fitted into panels of up to 3mm deep. A silicone seal is included to improve fitting on thin panels, however the maximum panel thickness is reduced to 2mm when fitted. Panel cut-out is 74 x 46mm.

Note: The display is NOT protected against moisture or dust.

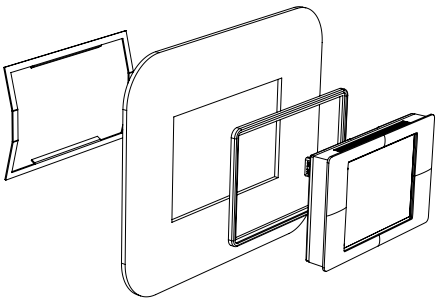

SGD 24-M420

Current Loop Indicator PanelPilot Compatible Smart Graphics Display

Dimensions

All dimensions in mm (inches)

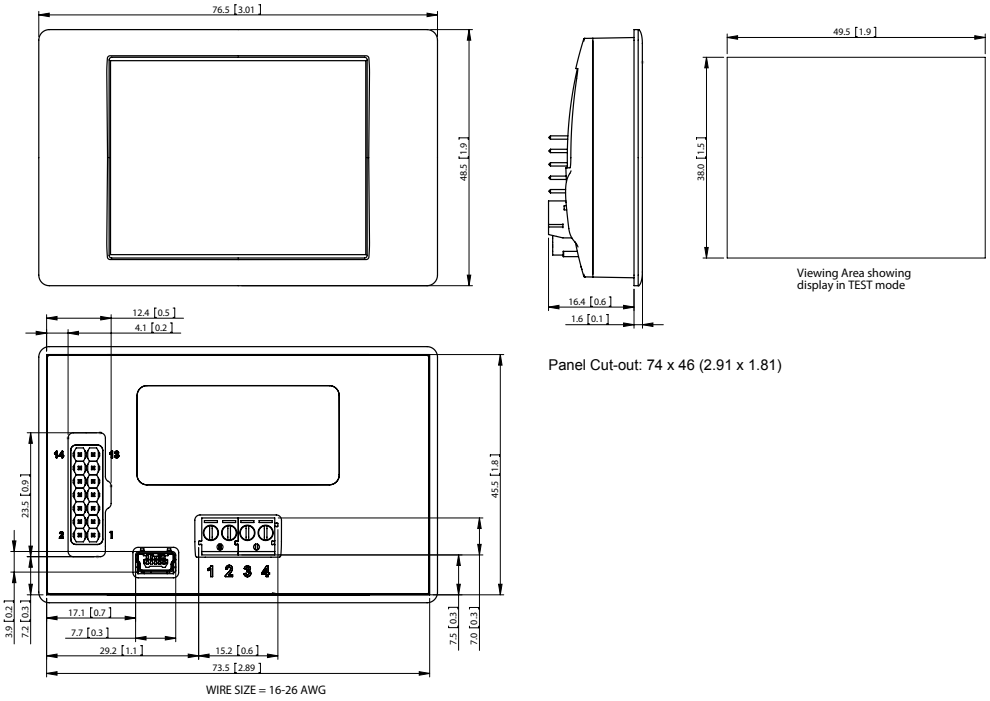

Panel Cut-out: 74 x 46 (2.91 x 1.81)

PanelPilot Software

Lascar's PanelPilot software is available for download free of charge from www.PanelPilot.com. Easy to install and use, the control software runs under Windows 7, 8.1 and 10. The software is used to setup the appearance and operation of the meter and then upload these settings to the meter. Multiple types of meter are supplied with the software. Additional types will be made available to download - see www.PanelPilot.com for details of available meters.

N.B. Do not select any dual channel meters - as these are incompatible with current loop monitoring.

The software allows the following parameters to be configured:

- Meter type
- Text labels (including units and graph labels)
- Background, graph segment and text colors
- Decimal points (entered during scaling)
- Splashscreen image selection (to display a user image, such as a logo, when the meter is powered up)
- Input scaling / calibration (at two points) - fixed for 4-20mA applications

SGD 24-M420

Current Loop Indicator PanelPilot Compatible Smart Graphics Display

Various Operating Modes

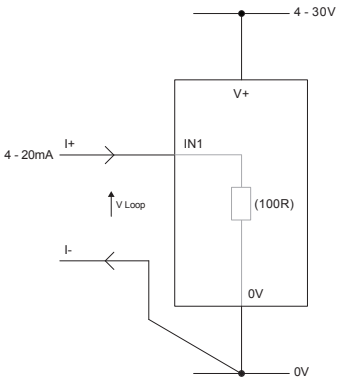

MEASURING 4-20mA

Power supply to meter must be fully floating (isolated from the 4-20mA current loop)

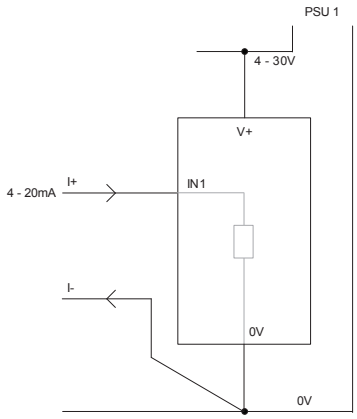

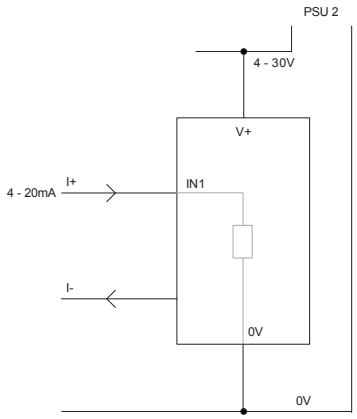

USING TWO SGD DISPLAYS IN SAME INSTALLATION

Each SGD must be powered from a seperate, fully floating, power supply

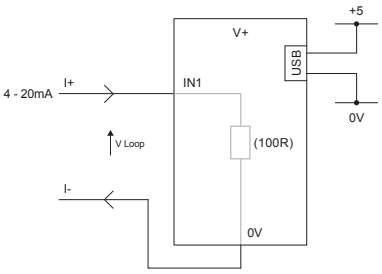

MEASURING 4-20mA USING A USB POWER SUPPLY

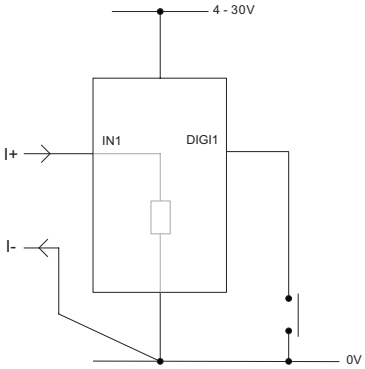

DIGITAL HOLD

DIGI1 will hold the display

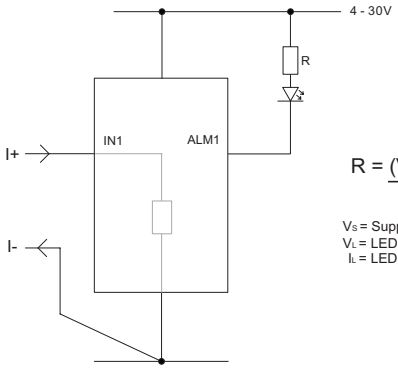

$$R = \frac{(V_S - V_L)}{I_L}$$

V_S = Supply voltage
V_L = LED Voltage drop
I_L = LED current

ALARM OUTPUT

Applications that feature an alarm can be connected as above. ALM1 must not sink more than 10mA maximum each. If supply voltage varies, use an appropriate voltage regulator.

SGD 24-M420

Current Loop Indicator PanelPilot Compatible Smart Graphics Display

Current Loop

Internally the SGD 24-M420 uses a Programmable Gain Amplifier (PGA) to make the best use of available resolution (theoretically there are eight different ranges available to the SGD. However for the 4-20mA application, this is effectively restricted to the 0-2.5 range.

Voltage Range (V)	Resolution (mV)
0 - 1.25	0.3
0 - 2.5	0.6 (4-20mA)
0 - 4	1.0
0 - 5	1.2
0 - 8	2.0
0 - 10	2.4
0 - 20	4.9
0 - 40	9.8

The input voltage range is decided using the two voltages that the user enters in the scaling section of the Panel Pilot software. The software uses the smallest range available, which can accommodate both of the voltages entered by the user.

Note: I+ and I- share a common ground (i.e. not floating or isolated from each other).

Advanced Connector

The DIL IDC socket provides an alternative connection method to the screw-teminals (V+, 0V, IN1 and IN2 are duplicated). It also includes provision for future expansion using data buses (SPI and I2C) and alarm ouputs.
Some expansion options may require an additional interface board - Visit www.panelpilot.com for information on which features are currently supported.

