

Model Number

RL29-8-H-1200-RT/59/73c/136

Background suppression sensor
with 4-pin, M12 x 1 plastic connector

Features

- Highly visible LED
- Good alignability due to red transmission LED
- Minimal black-white difference
- Powerful push-pull output
- Optimal price/power ratio
- Protection class II

Dimensions

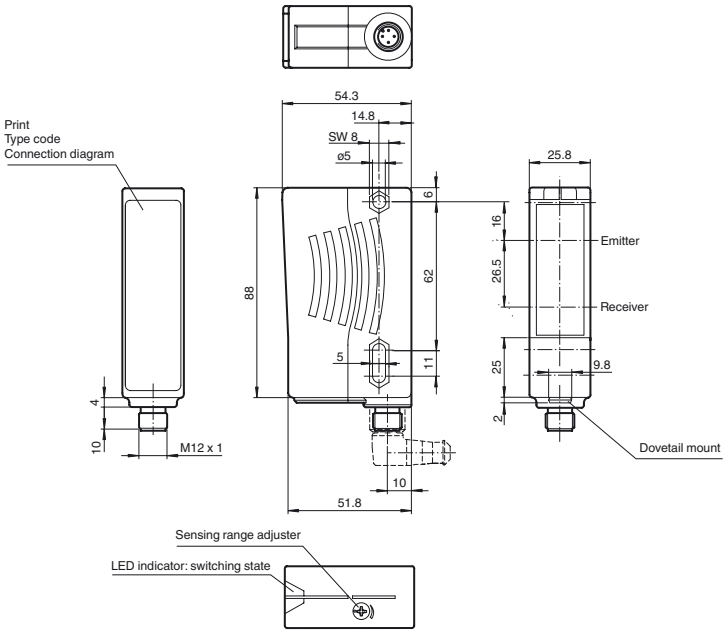

Electrical connection

Option:

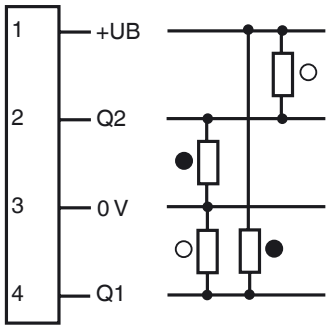

○ = Light on
● = Dark on

Pinout

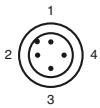

Wire colors in accordance with EN 60947-5-2

1	BN	(brown)
2	WH	(white)
3	BU	(blue)
4	BK	(black)

Release date: 2019-12-18 11:38 Date of issue: 2019-12-18 801768_eng.xml

Technical data

General specifications		
Detection range		30 ... 1200 mm , adjustable
Detection range min.		20 ... 200 mm
Detection range max.		30 ... 1200 mm
Background suppression		max. + 10 % of the upper limit of the detection range
Light source		LED 660 nm
Light type		modulated visible red light
Black/White difference (6 %/90 %)		< 35 % at 1200 mm sensor range
Diameter of the light spot		approx. 25 mm at a distance of 1200 mm
Angle of divergence		Emitter: 1.2 ° , Receiver: 2 °
Ambient light limit		50000 Lux
Functional safety related parameters		
$MTTF_d$		720 a
Mission Time (T_M)		20 a
Diagnostic Coverage (DC)		0 %
Indicators/operating means		
Function indicator		LED yellow: switching state
Control elements		Sensing range adjuster
Electrical specifications		
Operating voltage	U_B	10 ... 30 V DC , class 2
Ripple		10 %
No-load supply current	I_0	≤ 40 mA
Output		
Switching type		dark on
Signal output		2 push-pull (4 in 1) outputs, short-circuit protected, reverse polarity protected
Switching voltage		max. 30 V DC
Switching current		max. 100 mA
Switching frequency	f	125 Hz
Response time		4 ms
Conformity		
Product standard		EN 60947-5-2
Ambient conditions		
Ambient temperature		-25 ... 60 °C (-13 ... 140 °F)
Storage temperature		-40 ... 75 °C (-40 ... 167 °F)
Mechanical specifications		
Housing width		25.8 mm
Housing height		88 mm
Housing depth		54.3 mm
Degree of protection		IP65
Connection		Plastic connector M12 x 1, 4-pin
Material		
Housing		Plastic ABS
Optical face		plastic
Mass		70 g
Approvals and certificates		
Protection class		II, rated voltage ≤ 250 V AC with pollution degree 1-2 according to IEC 60664-1
UL approval		E87056 , cULus Listed , class 2 power supply , type rating 1

Curves/Diagrams

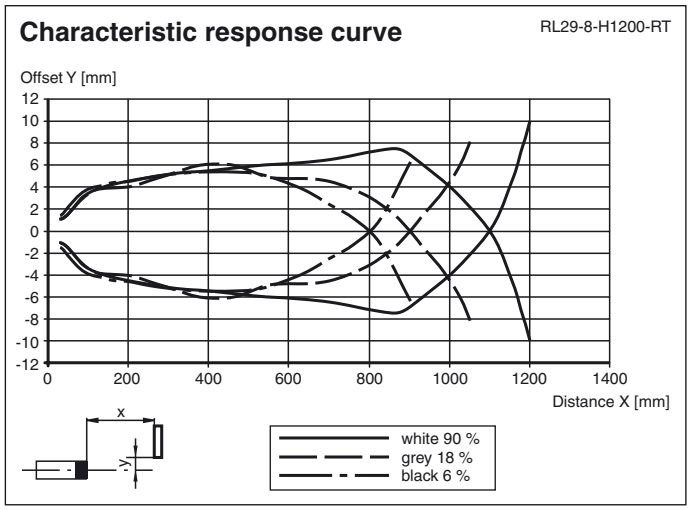

Accessories

OMH-05
Mounting aid for round steel ø 12 mm or sheet 1.5 mm ... 3 mm

OMH-07
Mounting aid for round steel ø 12 mm or sheet 1.5 mm ... 3 mm

OMH-21
Mounting bracket

OMH-22
Mounting bracket

OMH-MLV11-K
dove tail mounting clamp

OMH-RLK29-HW
Mounting bracket for rear wall mounting

OMH-RL28-C
Weld slag cover model

V1-G-2M-PUR
Female cordset, M12, 4-pin, PUR cable

V1-W-2M-PUR
Female cordset, M12, 4-pin, PUR cable

Other suitable accessories can be found at www.pepperl-fuchs.com

Release date: 2019-12-18 11:38 Date of issue: 2019-12-18 801768_eng.xml

Difference in detection distance

RL29-8-H-1200-RT

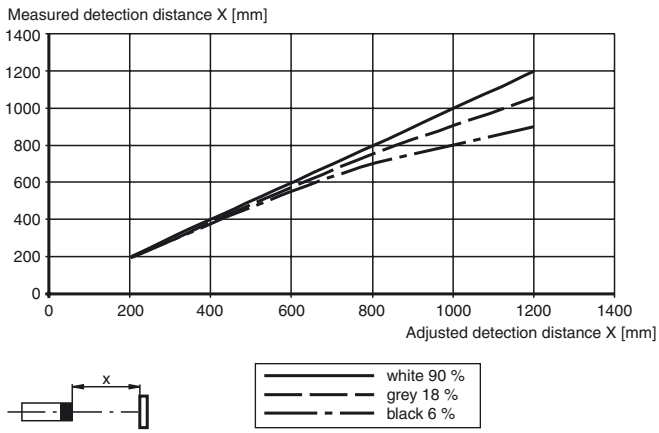

Release date: 2019-12-18 11:38 Date of issue: 2019-12-18 801768_eng.xml