# RAMO 22 T, M12, round collar, momentary contact function, frontring black, 1 NO, bezel green



### fields of application

- Measurement-control-regulation
- Electrical engineering
- Mechanical and system engineering
- Vehicle construction
- Chemical industry
- Industrial robots

### special features

- Key stroke with tactile feedback or mushroom pushbutton with latching actuator
- Based on the RAFI MICON 5 short-travel keyswitch with gold contacts, which has proven itself millions of times over
- Single-part, closed housing
- Unique series with easiest Plug&Play connection
- Completely tailored design – fits the RAFIX range of control components
- Installation size: 22.3 mm
- Plug & Play connection M12
- Custom print options, including FLEXLAB bezels
- Can be illuminated in many colors
- Redundant version with 2 NO contacts
- Pushbutton with black mushroom head

## description

Because it features the RAFI MICON 5 tactile switch, RAMO 22 T offers tactile feedback with a noticeable click. Due to the IP 66/ IP69K degree of protection, it is recommended in particular for plant engineering and construction. RAMO 22 T requires a mounting hole diameter of 22.3 mm.

As a further product variant, the RAMO 22 T mushroom pushbutton offers a latching pushbutton option for every application. It is characterised by form and function as for an emergency stop, but is only declared as a pushbutton. Various contact functions are possible.

**Additional information according to UL certificate:**

- Only approved for Class 2 Power Source or Limited Voltage / Limited Current.
- Installation only by trained specialist personnel.
- Type 4x Indoor only with cable "Cat. No. 7000-08061-0210100 PUR 4x0.25mm² with M8 connector, rated max. 30VAC/DC 4A, manufactured by Murrelektronik GmbH" and "Cat. No. 7000-12221-0340100 PUR 4x0.34mm² with M12 connector, rated max. 30VAC/DC 4A, manufactured by Murrelektronik GmbH"
- For Use on a Flat Surface of a Type 1 or 4x indoor only Enclosure.

The information in this data sheet only contains general descriptions and / or performance features, which may not apply precisely as described to the respective application, and which my change due to further product enhancements. The technical data, illustrations and other information about our products are the mere results of individual technical testing. These descriptions and other product features are only binding if they expressly agreed upon at the time of the conclusion of a binding contract. In all other cases, we reserve the right to make technical changes as well as changes of availability. Pictures and other graphic illustrations are approximations only. All product names may be trademarks or brand names of the RAFI Group or any other sub-supplier of RAFI. The use of such by any third parties for their own purposes may infringe the rights of the respective entity holding those rights.


**RAFI GmbH & Co. KG**

Ravensburger Str. 128-134
88276 Berg / Ravensburg
Germany
www.rafi-group.com,
info.headquarters@rafi-group.com

## technical data

### general

| | |
|---|---|
| Potential free | yes |
| Color | black |
| Bezel color | green |
| Property of bezel / mushroom | translucent |
| Collar color | black |
| Front ring color | black |
| Luminous element color | green |
| Collar shape | round |
| Operating temperature, min. | -40 °C |
| Operating temperature, max. | 85 °C |
| Storage temperature, min. | -40 °C |
| Storage temperature, max. | 85 °C |
| illuminated | Yes |
| Luminous elements | LED |
| Packaging | Box |
| Packaging unit | 10 pcs. |
| net weight | 12.6 g |
| Operating life | 500,000 cycles |
| B10 | 650,000 cycles |
| Degree of protection, front side, according to DIN EN 60529 | IP66<br>IP67<br>IP69 |
| Degree of protection, rear side, according to DIN EN 60529 | IP66<br>IP67 |
| UL Enclosure Type Rating front side | type 4X indoor |
| Environment resistance | IEC 60068-2-14<br>IEC 60068-2-30<br>IEC 60068-2-33<br>IEC 60068-2-78 |
| Salt-spray resistance according to standard | IEC 60068-2-11 |
| Impact resistance IK | 05 |
| MOQ order | 10 pcs. |
| Pollution degree acc. to DIN EN 61010-1 | Pollution degree 2 |
| RoHS compliant | Yes |
| REACH compliant | Yes |

### mounting diameters

| | |
|---|---|
| Outside dimension, length | 40 mm |
| Outside dimension, width | 29.8 mm |
| Outside dimension, height | 29.8 mm |
| Mounting hole | 22.3 mm |
| Mounting depth | 30.2 mm |
| Installation height | 9.8 mm |

**direct links**

- RAFI eCatalog

The information in this data sheet only contains general descriptions and / or performance features, which may not apply precisely as described to the respective application, and which my change due to further product enhancements. The technical data, illustrations and other information about our products are the mere results of individual technical testing. These descriptions and other product features are only binding if they expressly agreed upon at the time of the conclusion of a binding contract. In all other cases, we reserve the right to make technical changes as well as changes of availability. Pictures and other graphic illustrations are approximations only. All product names may be trademarks or brand names of the RAFI Group or any other sub-supplier of RAFI. The use of such by any third parties for their own purposes may infringe the rights of the respective entity holding those rights.


**RAFI GmbH & Co. KG**

Ravensburger Str. 128-134
88276 Berg / Ravensburg
Germany
www.rafi-group.com,
info.headquarters@rafi-group.com

| | |
|---|---|
| Grid, min. | 30 mm |

**mechanical data**

| | |
|---|---|
| Actuation function | momentary contact function |
| Operating force, max. | 12 N |
| Operating force, min. | 5 N |
| Operating travel, max. | 1 mm |
| Resistance to force on the side | 300 N |
| Contact function | 1 NO |
| Contact material | Gold |
| Fixing | Threaded ring |
| Threaded ring torque, max. | 1.2 Nm |
| Terminal on the rear | M12 4-pin A-coded |
| PIN 1 | Normally open contact 1 |
| PIN 2 | LED + |
| PIN 3 | GND |
| PIN 4 | Normally open contact 1 |

**electrical data**

| | |
|---|---|
| Rated insulation voltage | 250 V |
| Rated surge voltage | 800 V |
| Rated operating voltage | 35 V (AC-15)<br>35 V (DC-13) |
| Operating voltage of the luminous element, min. | 20 V |
| Operating voltage of the luminous element, max. | 28 V |
| Rated voltage, min. | 0.02 V |
| Rated voltage, max. | 35 V |
| Rated voltage, max. acc. to UL 60947 | 30 V DC (42,4 V peak) |
| Voltage type | DC |
| Rated operating current | 0.1 A |
| Rated operating voltage | 0.02-35 V |
| Rated current, min. | 0.00001 A |
| Rated current, max. | 0.1 A |
| Rated power, max. | 1 W |
| Power loss | 0.70030 W |
| Overvoltage category | 2 |
| Kind of short circuit protective device | fuse 250 V / 0,1 A / 1,5 kA gG quick |
| Conditional short circuit current | 1,000 A |

The information in this data sheet only contains general descriptions and / or performance features, which may not apply precisely as described to the respective application, and which my change due to further product enhancements. The technical data, illustrations and other information about our products are the mere results of individual technical testing. These descriptions and other product features are only binding if they expressly agreed upon at the time of the conclusion of a binding contract. In all other cases, we reserve the right to make technical changes as well as changes of availability. Pictures and other graphic illustrations are approximations only. All product names may be trademarks or brand names of the RAFI Group or any other sub-supplier of RAFI. The use of such by any third parties for their own purposes may infringe the rights of the respective entity holding those rights.


**RAFI GmbH & Co. KG**

Ravensburger Str. 128-134
88276 Berg / Ravensburg
Germany
www.rafi-group.com,
info.headquarters@rafi-group.com

## drawings

### Dimensioned drawing

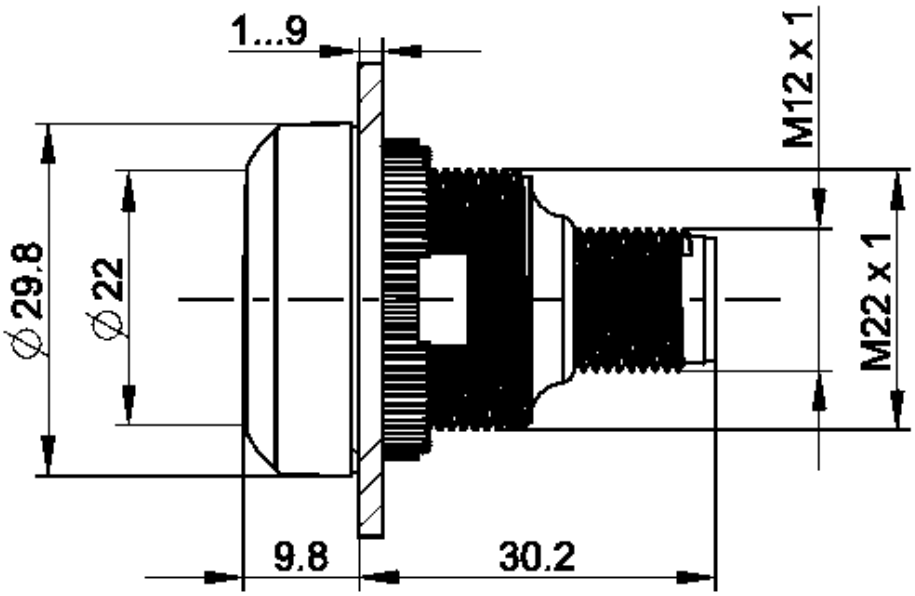


### Mounting hole drawing

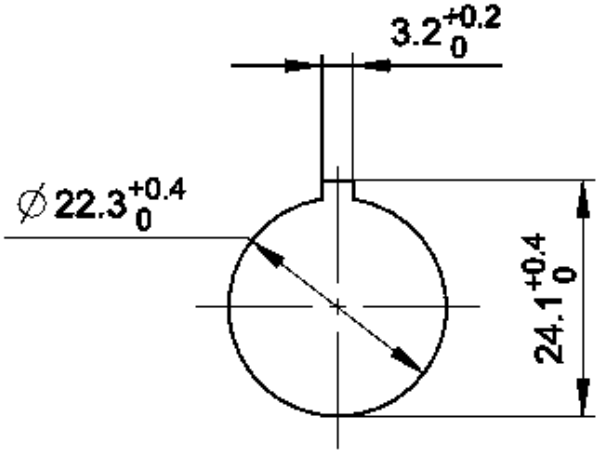


acc. to IEC 60947-5-1

The information in this data sheet only contains general descriptions and / or performance features, which may not apply precisely as described to the respective application, and which my change due to further product enhancements. The technical data, illustrations and other information about our products are the mere results of individual technical testing. These descriptions and other product features are only binding if they expressly agreed upon at the time of the conclusion of a binding contract. In all other cases, we reserve the right to make technical changes as well as changes of availability. Pictures and other graphic illustrations are approximations only. All product names may be trademarks or brand names of the RAFI Group or any other sub-supplier of RAFI. The use of such by any third parties for their own purposes may infringe the rights of the respective entity holding those rights.


**RAFI GmbH & Co. KG**

Ravensburger Str. 128-134
88276 Berg / Ravensburg
Germany
www.rafi-group.com,
info.headquarters@rafi-group.com

## Schematic diagram

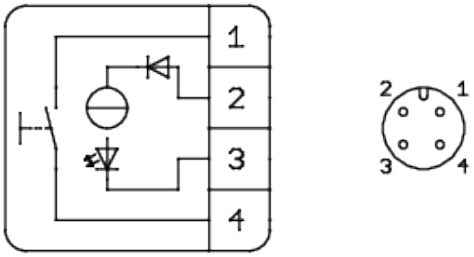


The information in this data sheet only contains general descriptions and / or performance features, which may not apply precisely as described to the respective application, and which my change due to further product enhancements. The technical data, illustrations and other information about our products are the mere results of individual technical testing. These descriptions and other product features are only binding if they expressly agreed upon at the time of the conclusion of a binding contract. In all other cases, we reserve the right to make technical changes as well as changes of availability. Pictures and other graphic illustrations are approximations only. All product names may be trademarks or brand names of the RAFI Group or any other sub-supplier of RAFI. The use of such by any third parties for their own purposes may infringe the rights of the respective entity holding those rights.


**RAFI GmbH & Co. KG**

Ravensburger Str. 128-134
88276 Berg / Ravensburg
Germany
www.rafi-group.com,
info.headquarters@rafi-group.com