**35NT2R82**

102 Watt

Graphite/Copper Commutation System - 13 Segments

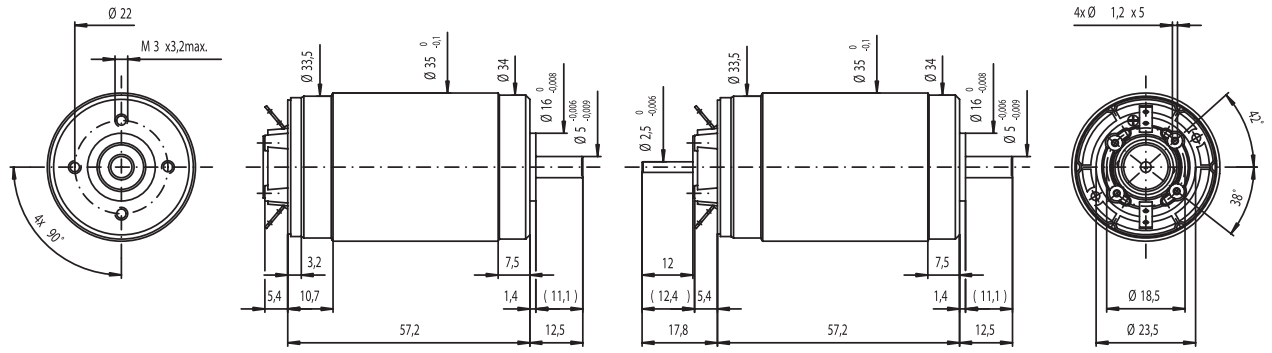


scale: 3:4
dimensions in mm
mass: 310 g

**35NT2R82 ⊙⊙ • 1**

**35NT2R82 ⊙⊙ • 50**

| **Winding Type** | ⊙⊙ | **426P** | **426SP** | **426E** | **226E** |
|---|---|---|---|---|---|
| **Measured Values** | | | | | |
| **Measuring voltage** | V | 18 | 32 | 60 | 28 |
| **No-load speed** | rpm | 6700 | 5900 | 5700 | 6900 |
| **Stall torque** | mNm (oz-in) | 838 (117) | 756 (107) | 782 (111) | 676 (96) |
| **Average No-load current** | mA | 141 | 80 | 40 | 80 |
| **Typical starting voltage** | V | -- | -- | -- | -- |
| **Max. Recommended Values** | | | | | |
| **Max. continuous current** | A | 4.4 | 2.3 | 1.19 | 2.6 |
| **Max. continuous torque** | mNm (oz-in) | 108 (15.3) | 115 (16.3) | 114 (16.1) | 97 (13.7) |
| **Max. angular acceleration** | $10^3$ rad/s² | 122 | 125 | 128 | 144 |
| **Intrinsic Parameters** | | | | | |
| **Back-EMF constant** | V/1000 rpm | 2.65 | 5.40 | 10.4 | 4.02 |
| **Torque constant** | mNm/A (oz-in/A) | 25.4 (3.6) | 52 (7.3) | 99 (14.1) | 38.4 (5.4) |
| **Terminal resistance** | ohm | 0.86 | 2.20 | 7.7 | 1.6 |
| **Motor regulation R/k²** | $10^3$/Nms | 1.3 | 0.83 | 0.77 | 1.1 |
| **Rotor inductance** | mH | 0.1 | 0.40 | 1.7 | 0.22 |
| **Rotor inertia** | kgm² $10^{-7}$ | 71.4 | 71.4 | 71.4 | 54 |
| **Mechanical time constant** | ms | 6.1 | 6 | 5.5 | 5.8 |

| **Executions** | | | | |
|---|---|---|---|---|
| | | **Single Shaft** | **For E9** | **HED5** |
| **Gearbox** | **Page** | **35NT2R82** | **35NT2R82** | **35NT2R82** |
| **R32** | **243** | **54** | **66** | **35** |
| **R40** | **248** | **54** | **66** | **35** |

- Thermal Resistance: rotor-body 4 °C/W, body-ambient 8 °C/W
- Thermal time constant - rotor / stator: 40s / 920 s
- Max. rated coil temperature: 155°C
- Recom. ambient temperature range: -55°C to +125°C (-31°F to +257°F)
- Max. axial static force for press-fit: 100 N, shaft supported: 1000N
- End play: negligible, Radial play: negligible, Shaft runout: ≤ 10 µm
- Max. side load at 5 mm from mounting face - ball bearings 35 N
- Motor fitted with ball bearings
- For filter add `F` to designation before coil
- On request available with HP encoder and brake

Max. Recommended Speed

